MECHAN MAGNASAFE MS2, MS3, MS4

MS2-10-DC-03M
Safety switch, 1 NO, 3m cable



- Max. 2 NO safety contact and 1 NC signal contact
- IP67, made of ABS or stainless steel
- Max. current DC: 30 V DC/ 1 A and AC: 230 V AC/ 2 A
- Cylindrical versions with M18 or M30 thread

PRODUCT DESCRIPTION

The Mechan Magnasafe switches are magnetically operated safety switches. Easy to install and maintain, the Magnasafe switches are fully encapsulated non-contact switches ideal for long term for use in harsh / wet environments. Available in a wide variety of sizes and contact configurations, MAGNASAFE switches are suitable for machine guarding applications where guard locking is not required.
Tolerant to misalignment, the MAGNASAFE range of non-contact safety switches are suitable for use in wash-down areas making them ideal for use in the food processing / filling and packing industries as well as many other non-locking machine guard applications.

Features:

- Non-contact operation
- IP67 fully sealed, washdown
- ABS or stainless steel
- Max 2A switching capability
- Large range of sizes / fitting
- Quick disconnect options

SPECIFICATIONS

Safety contact NO	1
Signal contact NC	0
Contact Current Max	1 A
Activation Distance From	10 mm
Activation Distances	30 mm

Material Case	ABS plastic
IP Class	IP67
Temperature range from	-10 °C
Temperature range to	55 °C

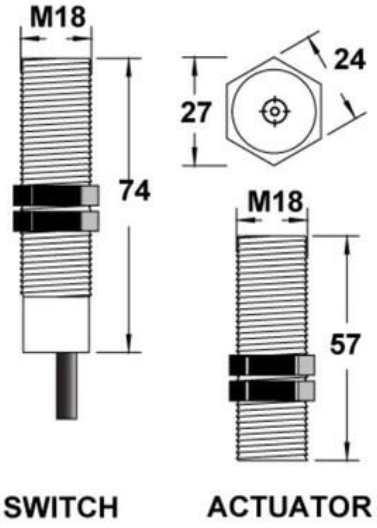
M18
74
27
24
M18
57
SWITCH
ACTUATOR