MECHAN - SSS, SSC, SSR CODED SAFETY SWITCH

SSC-11-03M
Electronic safety switch, 1 NO+1 NC, 3m cable



- Dual colour LED status indication
- IP67 sealing
- 8-10mm switching distance
- Choice of output contacts

PRODUCT DESCRIPTION

The SS range of electronically coded safety switches offer greater tamper resistance than standard magnetically operated switches. The units are fully encapsulated into resin filled ABS housings and have a status LED for visual indication of operation.

When the actuator is brought to the sensing part of the switch (within 8-10mm target to target) a dynamic signal is generated in the actuator and transmitted to the sensor. This signal will, along with a secondary switching system, allow the safety control relays to energise thus closing the safety contacts and opening the signal contacts.

TECHNICAL SPECIFICATION

	SSS	SSC	SSR
Power supply	24Vdc		
Power consumption	2VA		
Safety contact rating	2A @ 230Vac or 30Vdc	500mA @ 110Vac or 24Vdc	2A @ 230Vac or 24Vdc
Auxiliary contact rating	2A @ 230Vac or 30Vdc	500mA @ 110Vac or 24Vdc	2A @ 230Vac or 24Vdc
External fuse (not supplied)	3A fast acting		
Operating temperature	-10°C to +55°C		
Storage temperature	-20°C to +60°C		
Housing	Blue ABS case, resin filled		
Protection	IP67		
Vibration/shock	50-100Hz/10g		
Switching distance	6-9mm on, 10-12mm off		
Optimum gap	2mm		
Max. cable length	100 metres		
Indication	Green LED	Dual colour LED (red/green)	Dual colour LED (red/green)

Mounting	M4 security screws (supplied)

DIMENSIONS

SSS

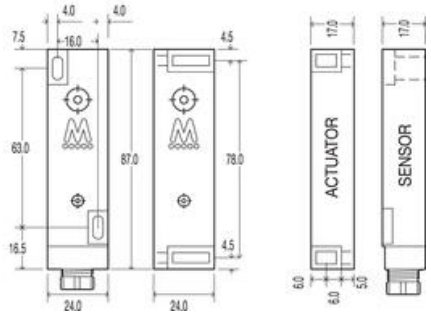

SSC

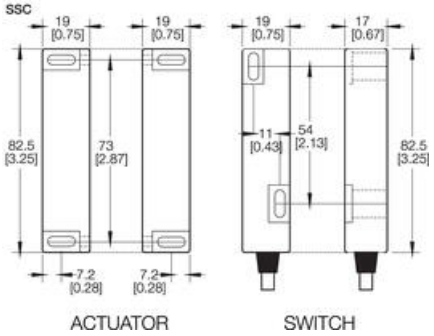

SSR

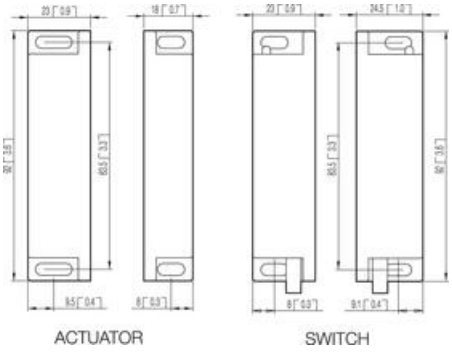

MOUNTING

The SSS safety switches can approach each other from any angle.
The target on the printed face of the switch must be aligned.
Mount the switch on to the machine frame and the magnet on to the opening door.
Use the tamper proof screws provided.
Do not use the safety switch as a door stop.

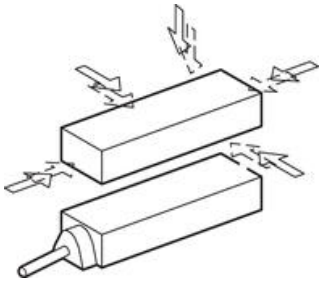

Leave a minimum of 50mm between any adjacent door switch

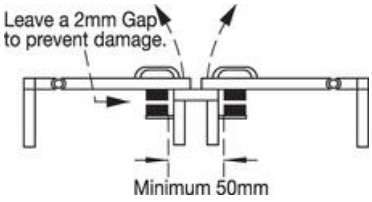

Always try to mount the switch to non ferrous material.
Ferrous material will reduce the switching distance.

Do not mount the switch to the hinge of the door

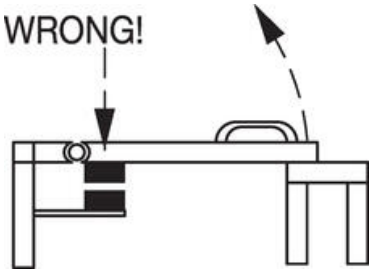

SLIDING DOORS
EN 1088 provides some mounting suggestions, see example below.
When fixing the safety switch to a sliding door
A) ensure that when the door is opened
B) it is not easily accessible, helping prevent the system being overridden.

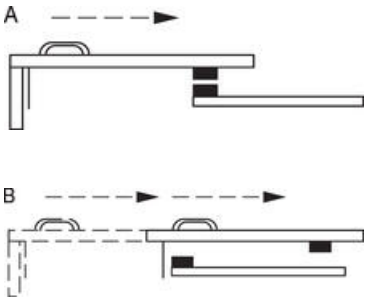

ORDERING INFORMATION

Part number	Output contacts	Cable length

SSS-11-03M	1 normally open safety, 1 normally closed auxiliary	3m
SSS-20-03M	2 normally open safety	3m
SSS-11-QD-05M	1 normally open safety, 1 normally closed auxiliary	5m quick disconnect
SSS-20-QD-05M	2 normally open safety	5m quick disconnect
SSS-QD-CABLE-05M		5m, 6pin cable only
SS-C-03M	1 normally open safety, 1 normally closed auxiliary	3m
SS-C-05M	1 normally open safety, 1 normally closed auxiliary	5m
SS-C-10M	1 normally open safety, 1 normally closed auxiliary	10m
SS-R-03M	2 normally open safety, 1 normally closed auxiliary	3m
SS-R-05M	2 normally open safety, 1 normally closed auxiliary	5m
SS-R-10M	2 normally open safety, 1 normally closed auxiliary	10m

Please Note: Other cable lengths available on request.

SPECIFICATIONS

Safety contact NO	1
Signal contact NC	1
Contact Current Max	500 mA
Activation Distance From	7 mm
Activation Distances	11 mm

Material Case	ABS plastic
IP Class	IP67
Temperature range from	-25 °C
Temperature range to	55 °C

B10d	2,0 milj.

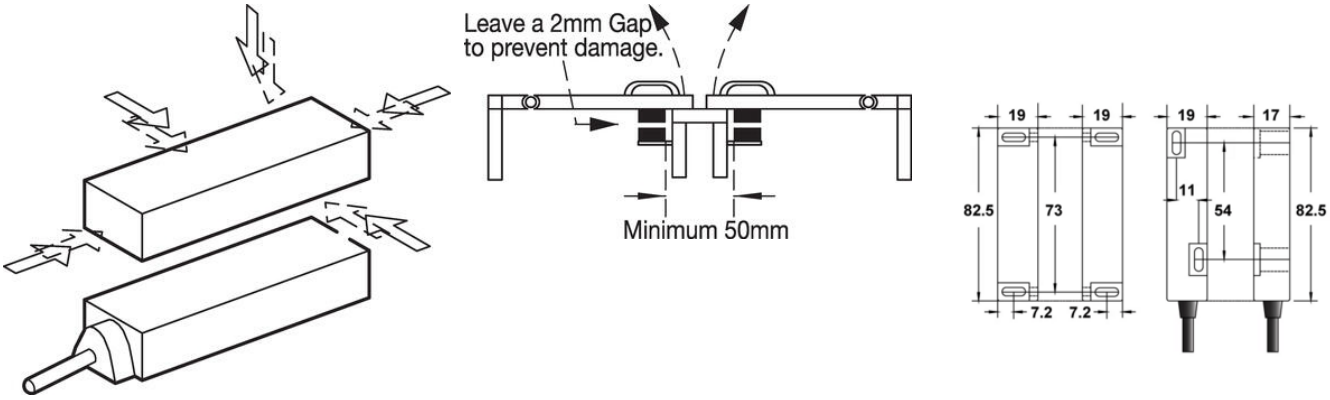

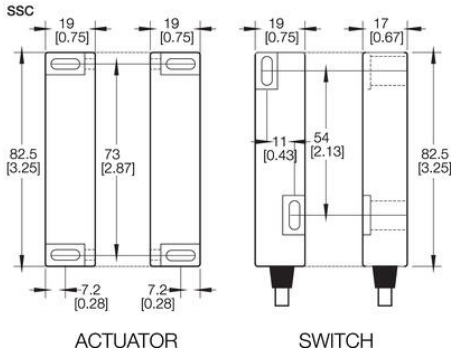
SSC
19
[0.75]
19
[0.75]
82.5
[3.25]
73
[2.87]
7.2
[0.28]
7.2
[0.28]
ACTUATOR
19
[0.75]
17
[0.67]
11
[0.43]
54
[2.13]
82.5
[3.25]
SWITCH

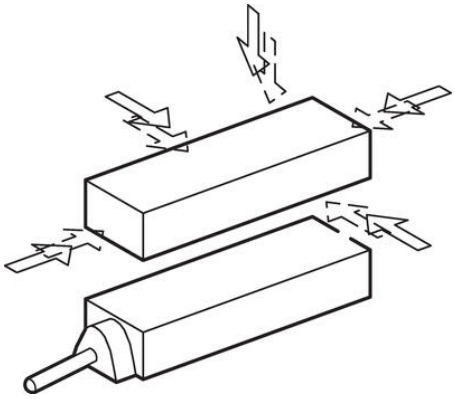

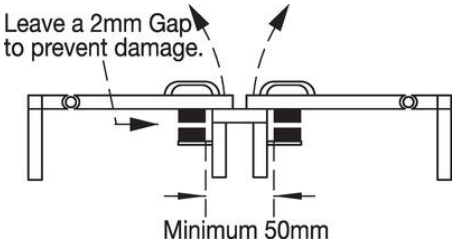
Leave a 2mm Gap
to prevent damage.
Minimum 50mm

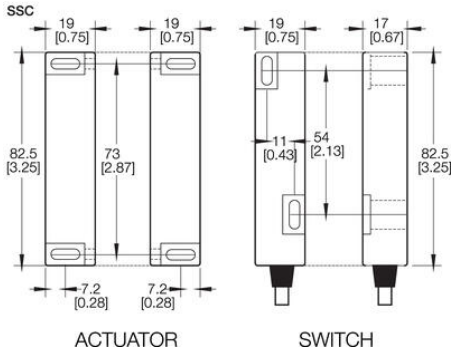
SSC
19
[0.75]
19
[0.75]
82.5
[3.25]
73
[2.87]
7.2
[0.28]
7.2
[0.28]
ACTUATOR
19
[0.75]
17
[0.67]
11
[0.43]
54
[2.13]
82.5
[3.25]
SWITCH