MECHAN HED ELECTRONIC HALL SAFETY SWITCH

HED-21-DC-06M-C
Electronic safety switch, 2 NO+1 NC, 6m cable, C



- Electronic, utilizes Hall-technology
- Coded magnetic safety switch
- Seal made of ABS, IP67
- Switching distance 7mm
- LED indication

PRODUCT DESCRIPTION

The HED safety switch monitors 2 adjacent doors with only one switch, saving on installation time, cabling and cost
With 2 x N/O + 1 N/C bidirectional solid state outputs along with a built in LED(s) for indication. When installed on a machine guard, power is applied, and the switch and actuator are within the specified operating range, the N/O Outputs will be closed, the N/C Output will be open.
The HE safety switches are fully encapsulated into an ABS or 316 stainless steel housing and available with 5, 10 or 15 metre pre-wired cable. With a 7mm switching distance the actuator can approach the switch from most angles. When both switches are closed the targets on the printed face of the switch must be aligned.

- Coded magnetic operation
- Dual Switch, monitors 2 doors
- 2 normally open + 1 normally closed output
- Solid state bi-directional outputs
- 24Vdc operation
- LED indication

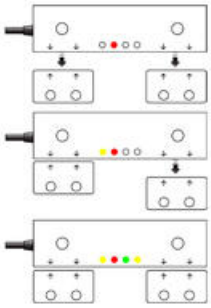

SPECIFICATIONS

Safety contact NO	2
Signal contact NC	1
Contact Current Max	400 mA
Activation Distance From	7 mm

Activation Distances	14 mm

Material Case	ABS plastic
IP Class	IP67, IP69K
Temperature range from	-25 °C
Temperature range to	55 °C

B10d	2,0 milj.

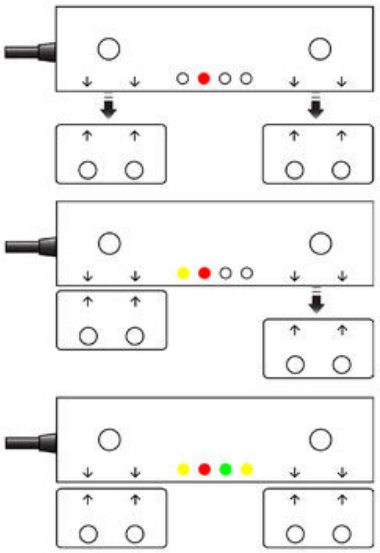

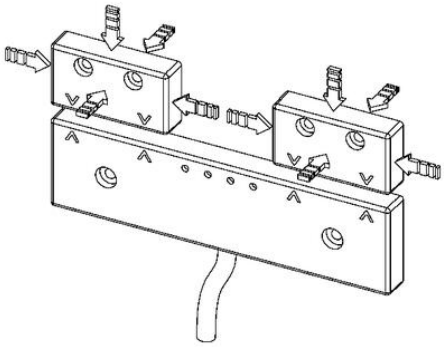

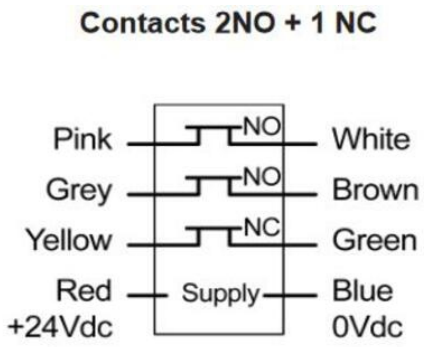

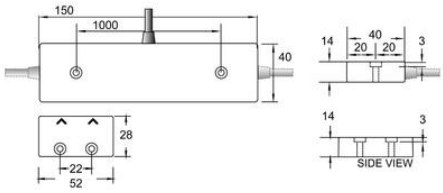

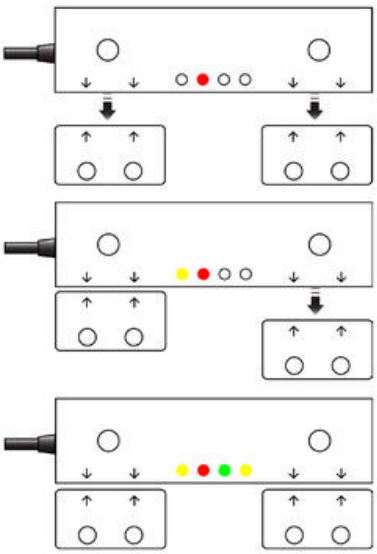

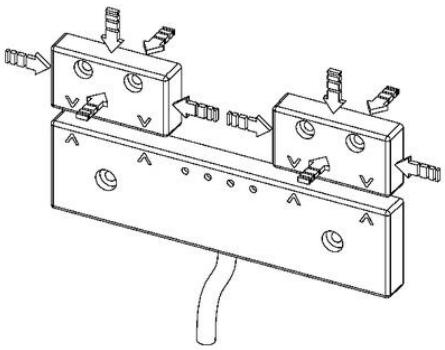

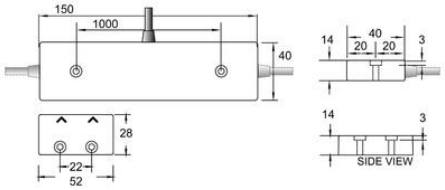
150
1000
40
28
22
52
14
40
20
20
3
14
3
SIDE VIEW