BERNSTEIN

# RFID SAFETY SWITCH SRF

607.5685.121
SRF safety switch, RFID, 2xOSSD, M12 5-pole, low coding level



- RFID technology
- PLe and SIL3 also in series circuit
- Dual color LED state indication

**PRODUCT DESCRIPTION**

## SPECIFICATIONS

| | |
|---|---|
| **IP Class** | IP69 |
| **Temperature range from** | -25 °C |
| **Temperature range to** | 70 °C |

| | |
|---|---|
| **Sensing** | 13 mm |
| **Supply voltage** | 24 V DC |
| **SIL CL** | 3 |
| **Approvals** | CE, CSA US, TÜV NORD |

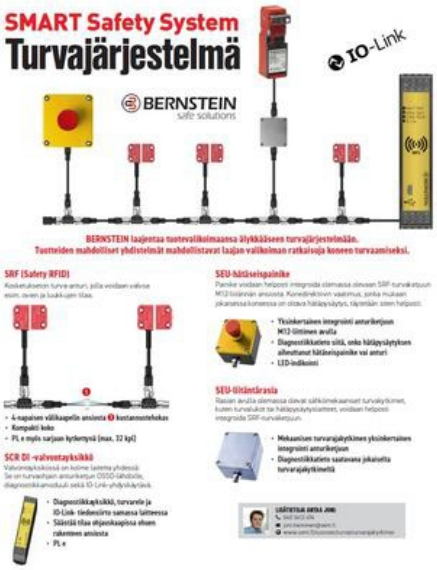












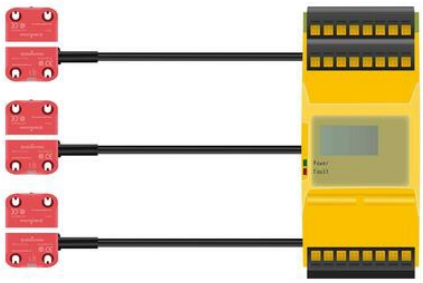

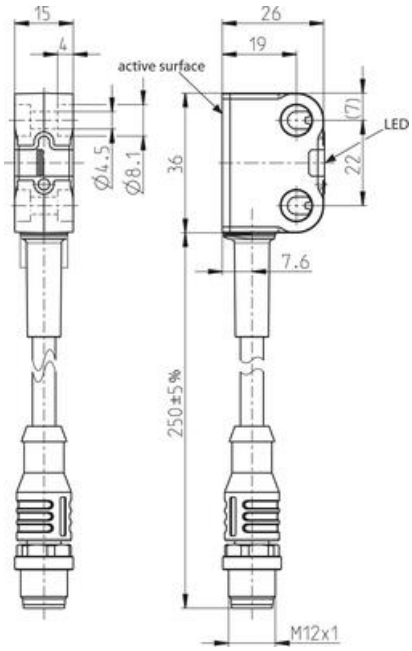


**Connection**

| | |
|---|---|
| Pin 1 (brown) | + |
| Pin 2 (white) | Q1 |
| Pin 3 (blue) | - |
| Pin 4 (black) | Q2 |
| Pin 5 (grey) | PNP/OUT |

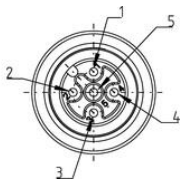

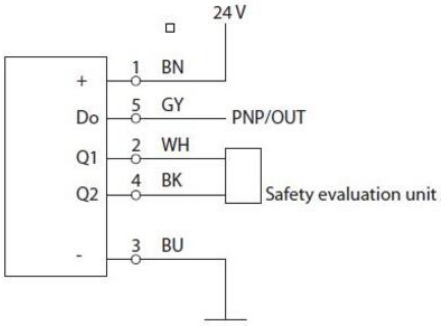
24 V
+
1 BN
Do
5 GY
PNP/OUT
Q1
2 WH
Q2
4 BK
Safety evaluation unit
-
3 BU