HOKUYO

UAM-05 SAFETY LASER SCANNER

UAM-05LP-T301
Safety laser scanner, 5m, connecting cable 3m



- Protection zone 5m
- Warning zone 20m
- Versatile scanner for various applications
- Type 3, SIL2, PLd

PRODUCT DESCRIPTION

UAM-05 is the smallest safety laser scanner on the market packed with outstanding features. Extremely compact size, dimensions are only 80x80x95mm. Resolution can be selected between 30, 50, 70 and 150mm. Warning zone by default is 20 meters.

UAM is a perfect component for AGV applications as it features 32 area patterns which can be programmed via encoder input or static input. The scanner has a raw data output for transferring measured data from the surroundings.

Muting/override function enables the use in various muting-applications.

With the EDM function the scanner can monitor the input signal from the controlled machine so that the scanner can be used as a independent "stand-alone" unit without an external control unit.

The scanner can be utilized in horizontal and vertical mounting orientations.

Scanning area

The scanning area consists of protection zone and warning zone with up to 32 programmable patterns. UAM also supports Dual Protection Mode, in which the scanner monitors two separate hazardous areas simultaneously.

In the picture illustrated below
1) Protection zone 1, warning zone 1 warning zone 2
2) Protection zone 1 and protection zone 2

The Dual Protection Mode (pictured on the right) does not support warning zones like in standard mode.

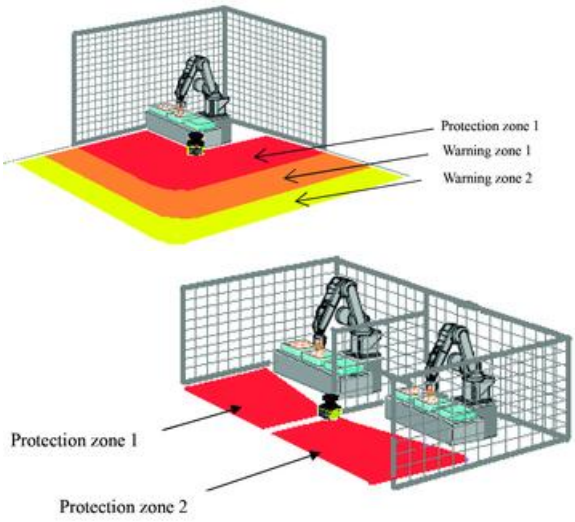

Applications

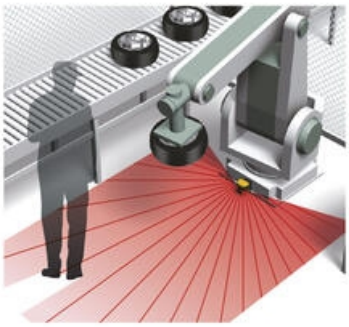		
Area control (fixed)	Area control (moving)	Access control

Scanning area
5 meter protection zone and 20 meter warning zone with 270° detection range.



SPECIFICATIONS

SUPPLY VOLTAGE

Supply voltage	24 V DC
Voltage Tolerance	±10 %

SCANNING

Security Field Max	5 m
Warning Field Max	20 m
Tolerance	+100 mm
Scanning Angle	270 °

Laser Class	Class 1
Number of security fields	128

INPUTS AND OUTPUTS

Dwell Time Min	60 ms
Dwell Max	510 ms

HOUSING

Width	80 mm
Length	80 mm
Height	95 mm
Temperature range from	-10 °C
Temperature range to	55 °C
IP Class	IP65
Weight	0.8 kg
Material of body	Aluminium
Material Front Glass	Polycarbonate

SAFETY APPROVALS

Approvals	BG, CE, cULus, TÜV
Conforming To	EMC, LVD, MD

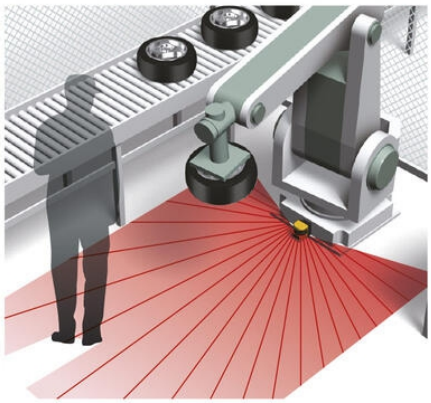

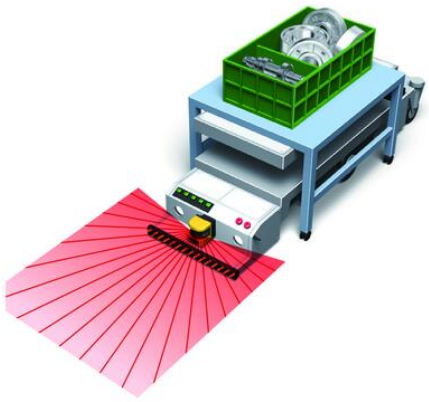



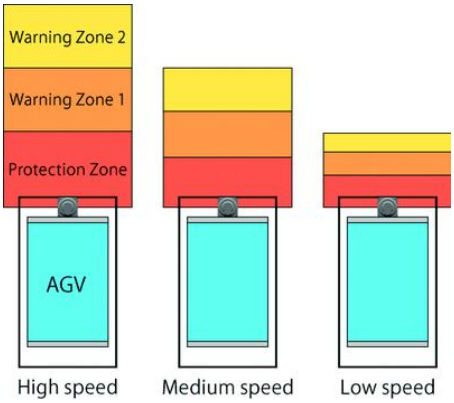
Warning Zone 2
Warning Zone 1
Protection Zone
AGV
High speed
Medium speed
Low speed

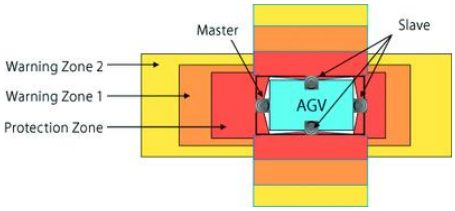
Master
Slave
Warning Zone 2
Warning Zone 1
Protection Zone
AGV



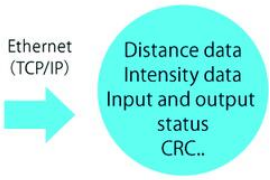
Ethernet
(TCP/IP)
Distance data
Intensity data
Input and output status
CRC..

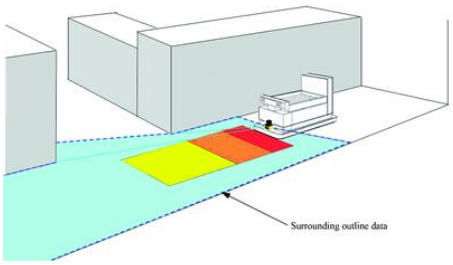
Surrounding outline data


Insert SD card
Settings data
Configuration can be also done via USB connection from a PC

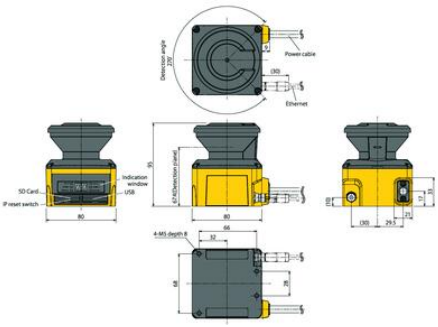

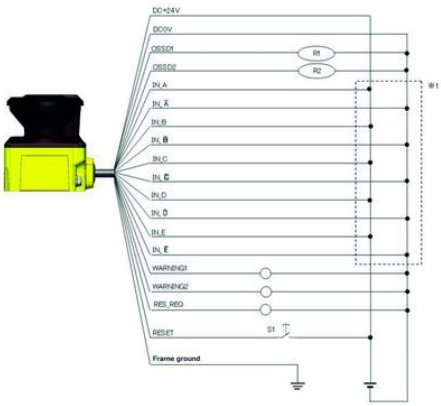
DC+24V
DC0V
OSSD1
OSSD2
IN_A
IN_Ā
IN_B
IN_B̄
IN_C
IN_C̄
IN_D
IN_D̄
IN_E
IN_Ē
WARNING1
WARNING2
RES_REQ
RESET
Frame ground
R1
R2
S1

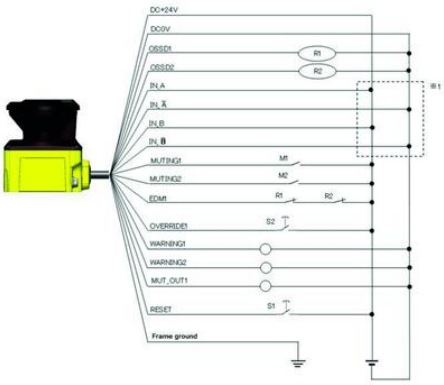
DC+24V
DC0V
OSSD1
OSSD2
IN_A
IN_Ā
IN_B
IN_B̄
MUTING1
MUTING2
EDM1
OVERRIDE1
WARNING1
WARNING2
MUT_OUT1
RESET
Frame ground
R1
R2
M1
M2
S1
S2

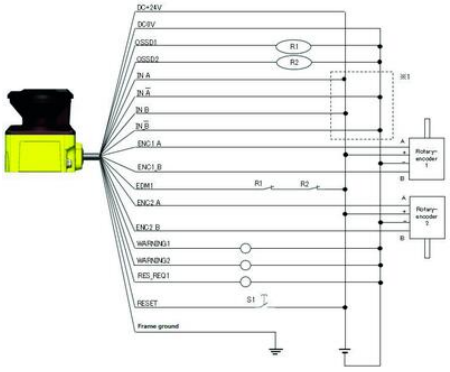
DC+24V
DC0V
OSSD1
OSSD2
IN_A
IN_Ā
IN_B
IN_B̄
ENC1_A
ENC1_B
EDM1
ENC2_A
ENC2_B
WARNING1
WARNING2
RES_REQ1
RESET
Frame ground
R1
R2
S1
Rotary encoder 1
Rotary encoder 2

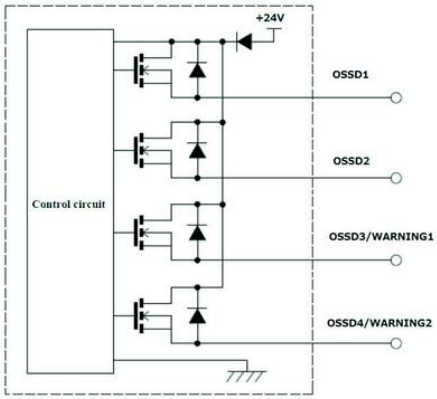
+24V
Control circuit
OSSD1
OSSD2
OSSD3/WARNING1
OSSD4/WARNING2

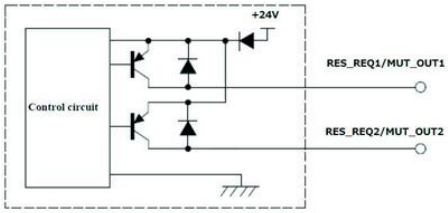
+24V
Control circuit
RES_REQ1/MUT_OUT1
RES_REQ2/MUT_OUT2

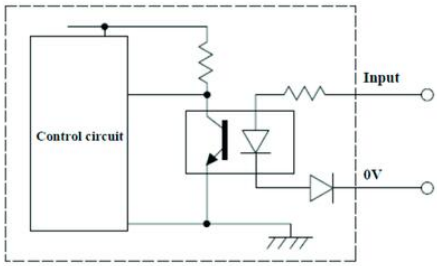
Control circuit
Input
0V


OSSD 1/2 indicator
Warning 1 indicator
Interlock 1 indicator
OSSD 3/4 indicator
Warning 2 indicator
Interlock 2 indicator
7-Segment display

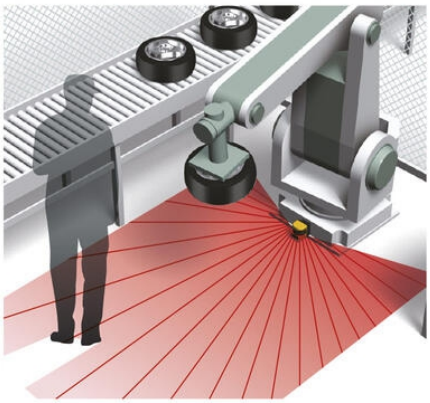

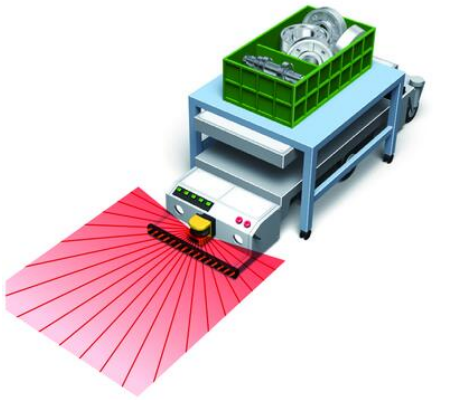



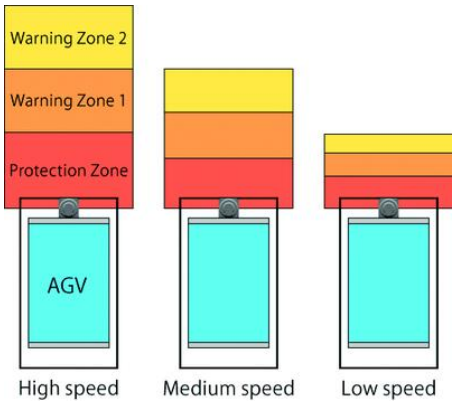
Warning Zone 2
Warning Zone 1
Protection Zone
AGV
High speed
Medium speed
Low speed

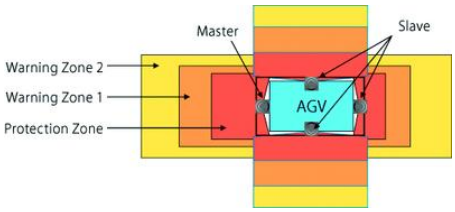
Master
Slave
Warning Zone 2
Warning Zone 1
Protection Zone
AGV

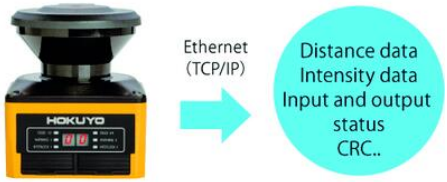
Ethernet
(TCP/IP)
Distance data
Intensity data
Input and output status
CRC..

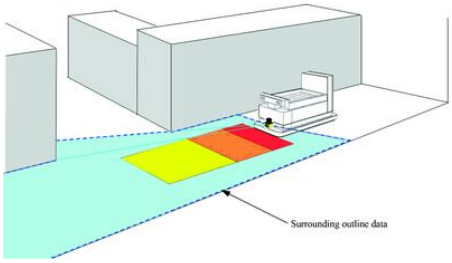
Surrounding outline data


Insert SD card
Settings data
Configuration can be also done via USB connection from a PC

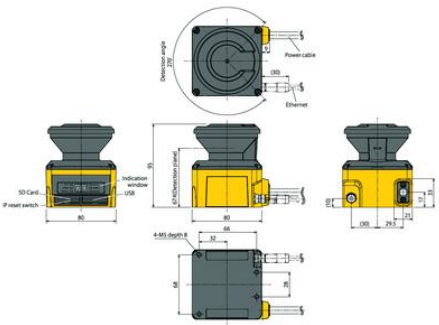

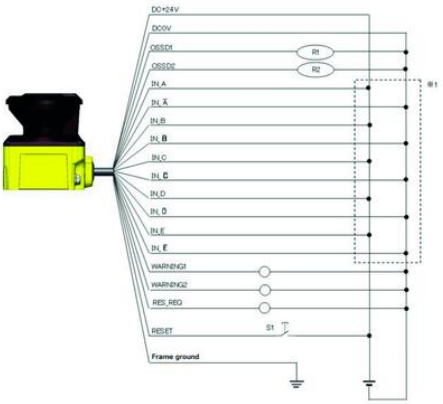
DC+24V
0V
OSSD1
OSSD2
IN_A
IN_B
MUTING1
MUTING2
EDM
OVERRIDE
WARNING1
WARNING2
MUT_OUT1
RESET
Frame ground

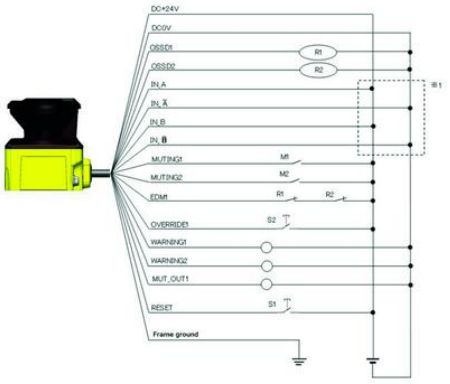
DC+24V
0V
OSSD1
OSSD2
IN_A
IN_B
MUTING1
MUTING2
EDM
OVERRIDE
WARNING1
WARNING2
MUT_OUT1
RESET
Frame ground

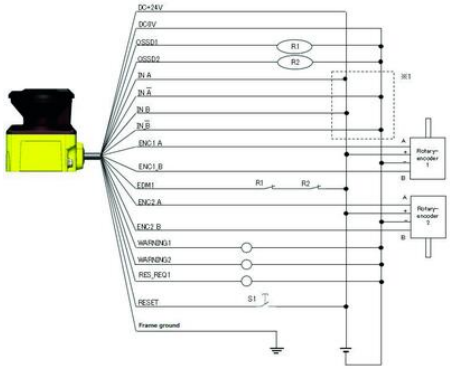
DC+24V
DC0V
OSSD1
OSSD2
IN A
IN Ā
IN B
IN B̄
ENC1 A
ENC1 B
EDM1
ENC2 A
ENC2 B
WARNING1
WARNING2
RES_REQ1
RESET
Frame ground
R1
R2
S1
K1
Rotary-encoder 1
Rotary-encoder 2

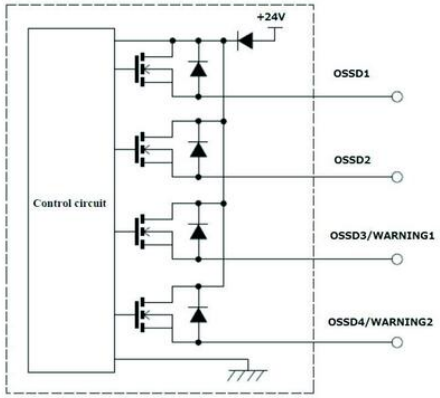
+24V
Control circuit
OSSD1
OSSD2
OSSD3/WARNING1
OSSD4/WARNING2

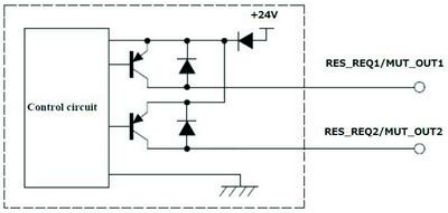
+24V
Control circuit
RES_REQ1/MUT_OUT1
RES_REQ2/MUT_OUT2

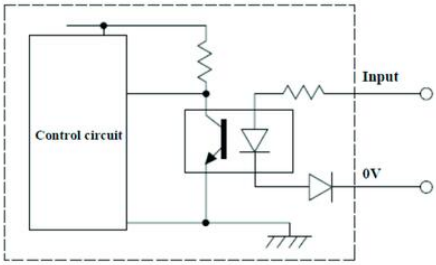
Control circuit
Input
0V


HOKUYO
OSSD 1/2 indicator
Warning 1 indicator
Interlock 1 indicator
OSSD 3/4 indicator
Warning 2 indicator
Interlock 2 indicator
7-Segment display