ORLACO

ORLACO -

ORL0186040
Camera EMOS 30

PRODUCT DESCRIPTION

SPECIFICATIONS

Camera Angle	30
IP Class	IP68, IP69K
Material	Anodized aluminum
Supply Voltage DC Max	24 V DC
Supply Voltage DC Min	12 V DC
Temperature range from	-40 °C
Temperature range to	85 °C
Vibration Resistance	50G

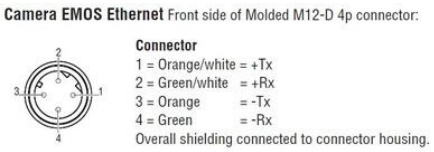

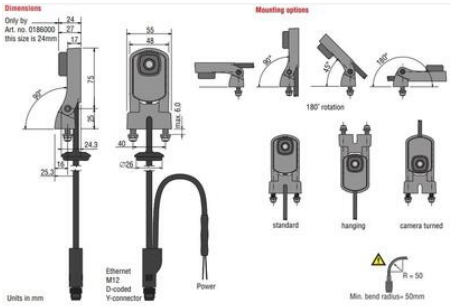

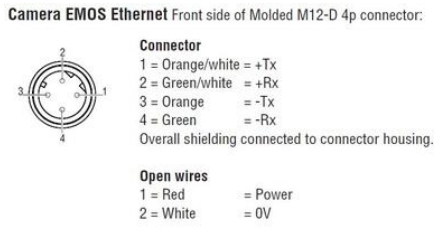

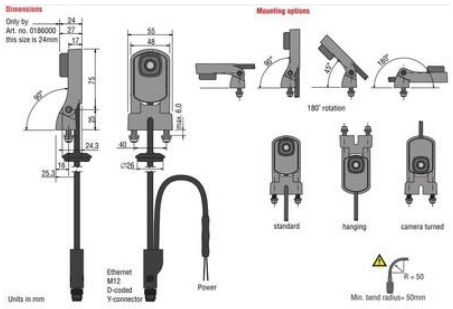
Dimensions
Only by
Art. no. 0186000
this size is 24mm
24
27
17
55
48
15
35
max. 6.0
24.3
40
16
25.3
Units in mm
Ethernet
M12
D-coded
Y-connector
Power
Mounting options
90°
45°
180°
180° rotation
standard
hanging
camera turned
R = 50
Min. bend radius= 50mm