REDUNDANT MODULE 20 A DIMENSION SERIES

12-28 V DC, 2x10 A

YR20.242
Redundancy Module 2 x 12-28V dc 10A I/P 12-28V dc 20A O/P



- For N+1 and 1+1 Redundant Systems
- MOSFET transistors
- Minimum power loss

PRODUCT DESCRIPTION

The YR20.242 is a redundancy module for building redundant power supply systems. It is equipped with two input channels and one output. The two inputs are decoupled by MOSFET technology.

In addition to the YR20.242, the YR20.246 is available which is featured with an automated load sharing between the connected power supplies and functions which monitor defects in the redundancy circuit or too high output currents, which could prevent redundancy, if one power supply fails.

The YR20.242 utilizes MOSFETs instead of diodes for the decoupling of the two input channels. This reduces the heat generation and the voltage drop between input and output. The redundancy module does not require an additional auxiliary voltage.

Due to the low power losses, the unit is very slender and only requires 32mm width on the DIN-rail. Large connection terminals allow for a safe and fast installation. The large international approval package makes this unit suitable for nearly every application.

SPECIFICATIONS

Input voltage DC	12-28 V
Input voltage dc min	8.4 V DC
Input voltage dc max	36.4 V DC
Input current per channel max	20 A
Input current at continuous overload or short circuit max	2x24 A
Type Power Supply	Redundancy modules

Output voltage	24 V DC
Output Current	20 A

Output current max	26 A
Temperature Range Without Derating From	-40 °C
Temperature Range Without Derating To	70 °C

Life span	355000 h @ 2x 20 A, 24 V DC, 40 °C
MTBF (IEC 61709)	7895000 h @ 2x 20 A, 24 V DC, 40 °C

Width	32 mm
Height	124 mm
Depth	127 mm
Weight	0.25 kg

Series	Dimension Y
Approvals	ATEX, CB, CE, CSA, CSA US, UL
Material Protection	Aluminium
IP Class	IP20
Voltage Drop Over The Semi-Conductor	110 mV

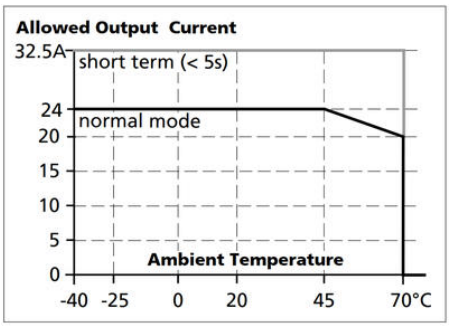

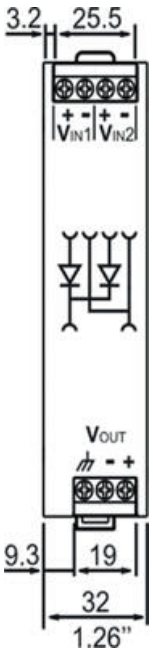

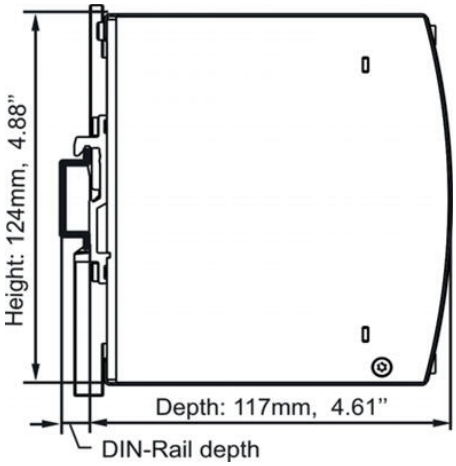

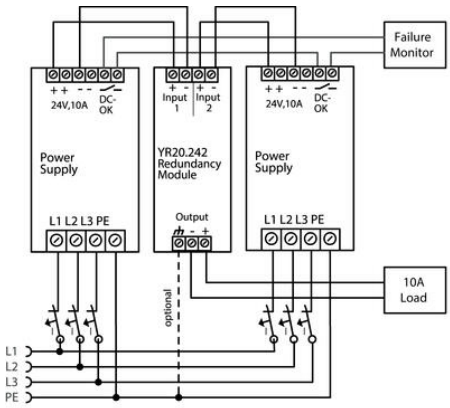
Failure Monitor
24V,10A
DC-OK
Input 1
Input 2
Power Supply
YR20.242 Redundancy Module
Output
L1 L2 L3 PE
optional
10A Load
L1
L2
L3
PE

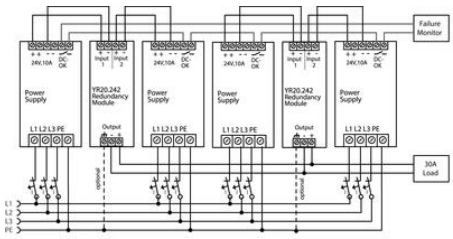
Failure Monitor
30A Load

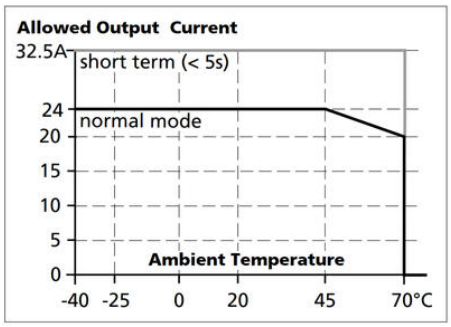
Allowed Output Current
32.5A
short term (< 5s)
24
normal mode
20
15
10
5
0
Ambient Temperature
-40
-25
0
20
45
70°C

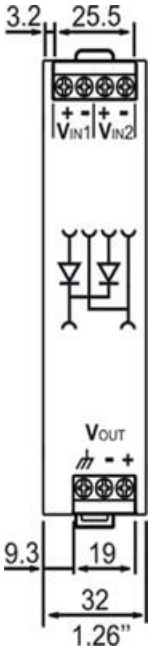
3.2
25.5
VIN1
VIN2
VOUT
9.3
19
32
1.26"

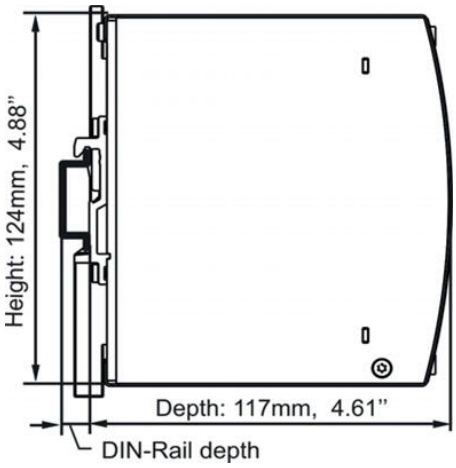
Height: 124mm, 4.88"
Depth: 117mm, 4.61"
DIN-Rail depth

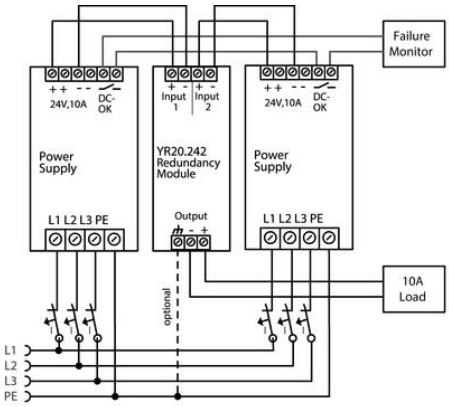
Failure Monitor
24V,10A
DC-OK
Input 1
Input 2
Power Supply
YR20.242 Redundancy Module
Output
L1 L2 L3 PE
optional
10A Load
L1
L2
L3
PE

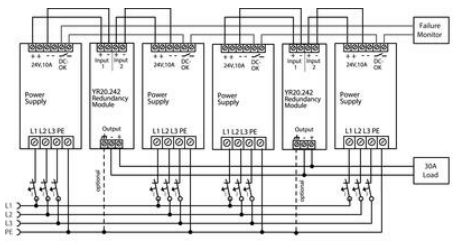
Failure Monitor
Power Supply
YR20.242 Redundancy Module
L1 L2 L3 PE
Output
optional
30A Load