24 V DC UPS FOR EXTERNAL BATTERY 3.9-40 AH

UB10.241
DC UPS 24VDC 10A



- Load current 10 A
- Only one 12 V battery
- Optimized battery charging
- Optional backup times
- Relay outputs for status

PRODUCT DESCRIPTION

UB10.241 is suitable for use in applications in which interruptions occur relatively often and the times are fairly short, such as for assuring process conclusion and retaining operation of PLC and other critical components.
A complete DC-UPS system consists of a control unit and battery, and power supply with suitable power for the application. In the event of a power outage, the battery is automatically switched in and supplies the connected loads. The control unit requires just (1) 12 V battery that then transforms the battery voltage up to 22.3 V dc. Two batteries do not need to be matched with one another and the output voltage does not follow the battery's discharge curve but is instead constant at 22.3 V. The battery capacity is utilized 100 % compared with two batteries connected in series, where one of the batteries is not fully charged.
Two relay outputs indicate status; the module is ready (battery capacity >85 %) and the module is active. (buffer mode) The control unit tests the battery's condition in cycles. When it is time to replace the battery, a relay output is activated (replace battery). At the front, optimized final charging voltage in relation to ambient temperature is selected. There are three available alternatives: 10 °C, 25 °C and 40 °C.
The back-up time can be set in different time ranges to save battery capacity. When choosing constant discharge, the output voltage will be active until the battery reaches deep discharge and the control unit then disconnects the battery. There is also an input, Inhibit, for external shut-off of the back-up time. In the event of a battery fuse fault, the “ready” output is deactivated and a red LED lights on the control unit. The output is current limited and turns itself off after about 5 seconds after a short circuit to spare the battery and at the same time, avoids tripping the battery fuse. In the event of a short circuit in the battery mode, the module supplies about 20 A, which helps trip any secondary fuses.
Monitoring of the battery fuse and current limitation in the event of short circuits provides increased reliability and guarantees that the UPS will function after a short circuit. There is no galvanic isolation between the 24 V dc input and output or between 24 V and 12 V. Isolation between the mains and the output is executed via the power supply.

Backup times

Back-up time with 7 Ah battery (curve A)	Back-up time with 26 Ah battery

SPECIFICATIONS

Input Voltage From The Unit	24 V DC

Input Voltage From battery	12 V DC
Input voltage for battery connection	22.8 V DC
Input Current During Charging Of Aggregates	1.2 A
Type Power Supply	DC-UPS

Output current at 24 V dc	10 A
Power Reduction Of 60 To 70 ° C	9.6 W/°C
Output Voltage at Battery	22.25
Output Voltage Normal Operation	24 V DC
Output Voltage At Buffering	22.25 V DC
Output current for battery operation max	10 A (15 A @ 5 s)
Output Current During Normal Operation Via The Unit Max	15 A
Ripple. max	20 mV pp
Temperature Range Without Derating From	-25 °C
Temperature Range Without Derating To	60 °C

Efficiency	97.8 %
Life span	137 400 h @ 10 A, 40 °C
MTBF (IEC 61709)	886 000 h @ 10 A, 40 °C

Width	49 mm
Height	124 mm
Depth	117 mm
Weight	0.65 kg

Approvals	ABS, CB, CE, CSA, CSA US, EX, GL, IECEx, UL
Material Protection	Aluminium
IP Class	IP20
Charging The Battery Type	1.5 A
Voltage Level Of The Connection Of The Battery	22.3 V DC
Permitted Battery Sizes	3,9-40 Ah

Fig. 9-1 **Buffer time vs. output current with the battery modules UZK12.071 and UZK12.261**

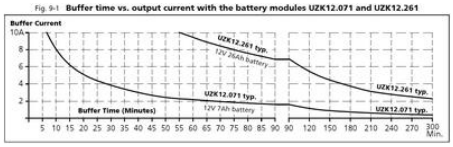

Fig. 24-2 **Front view**

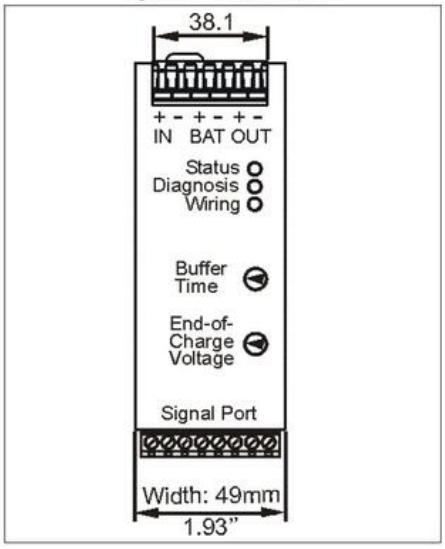

Fig. 24-1 **Side view**

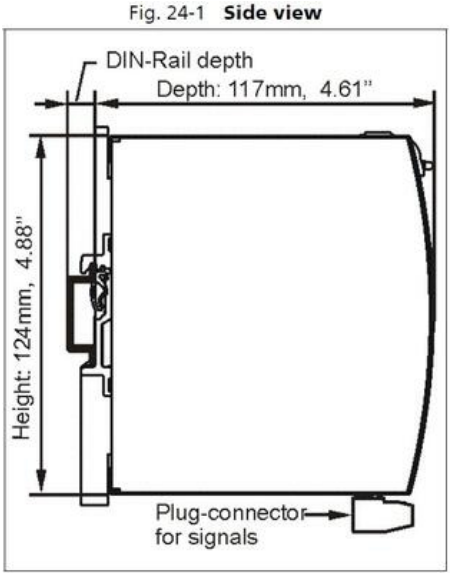

Fig. 25-1 **Typical wiring diagram**

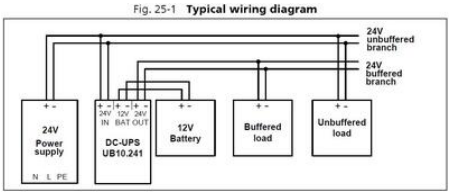

Fig. 9-1 **Buffer time vs. output current with the battery modules UZK12.071 and UZK12.261**

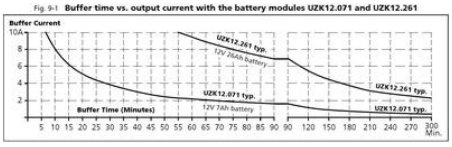

Fig. 24-2 **Front view**

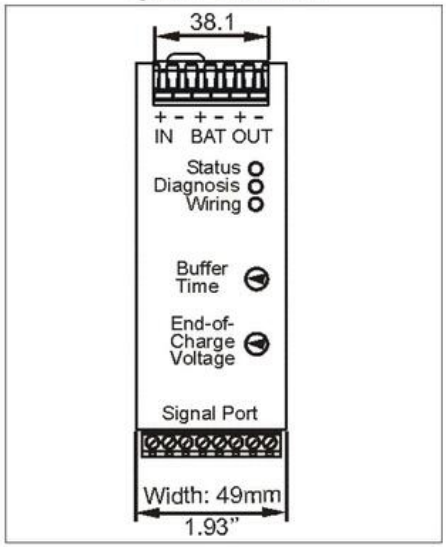

Fig. 24-1 **Side view**

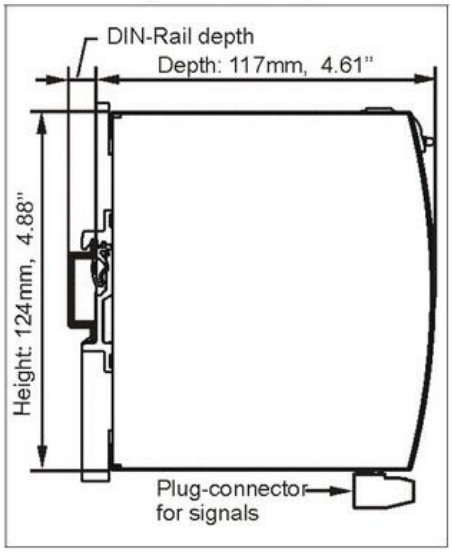

Fig. 25-1 **Typical wiring diagram**

