24 V DC UPS FOR EXTERNAL BATTERY 17-130 AH. 10 A

UB10.242
DC UPS 24VDC 10A



- Load current 10 A
- Requires just one 12 V dc battery
- Battery charging with temperature compensation
- Electronic overload/short-circuit protection
- Relay outputs for status

PRODUCT DESCRIPTION

UB10.242 is primarily intended for use where there are requirements for long back-up times with relatively low current. A complete DC-UPS system consists of a control unit and battery, and power supply with suitable power for the application. In the event of a power outage, the battery is automatically switched in and supplies the connected loads. The control unit requires just (1) 12 V battery that then transforms the battery voltage up to 22.3 V dc. Two batteries do not need to be matched with one another and the output voltage does not follow the battery's discharge curve but is instead constant at 22.3 V. The battery capacity is utilized 100 % compared with two batteries connected in series, where one of the batteries is not fully charged.
Two relay outputs indicate status; the module is ready (battery capacity >85 %) and the module is active (back-up mode). The control unit tests the battery's condition in cycles. When it is time to replace the battery, a relay output is activated (replace battery). The control unit has an integrated temperature sensor to optimize the final charging voltage. If the battery is placed at another location and the ambient temperature differs from the control unit, a compensation must be set, which is done using a switch on the front. To attain the longest lifetime for the battery, we recommend placing the battery in the coolest part of the cabinet.
The back-up time is dependent on the capacity and performance of the battery and the load current. On the data sheet, we show some times for different standard batteries. The control unit protects the battery from deep discharge. The control unit shuts off the back-up function when the battery voltage drops under a given value. There is also an input, Inhibit, for external shut-off of the back-up time.
In the event of a battery fuse fault, the “ready” output is deactivated and a red LED lights on the control unit. The output is current limited and turns itself off after about 5 seconds after a short circuit to spare the battery and at the same time, avoids tripping the battery fuse. In the event of a short circuit in the battery mode, the module supplies about 20 A, which helps trip any secondary fuses.
Monitoring of the battery fuse and current limitation in the event of short circuits provides increased reliability and guarantees that the UPS will function after a short circuit. The input is galvanically isolated from the output side.

Backup times

Discharge curve with 2 A load current	Discharge curve with 10 A load current

SPECIFICATIONS

Input Voltage From The Unit	24 V DC
Input Voltage From battery	12 V DC
Input voltage for battery connection	22.8 V DC

Input Current During Charging Of Aggregates	2 A
Type Power Supply	DC-UPS

Output current at 24 V dc	10 A
Output Voltage at Battery	22.25
Output Voltage Normal Operation	24 V DC
Output Voltage At Buffering	22.25 V DC
Output current for battery operation max	10 A (15 A @ 5 s)
Output Current During Normal Operation Via The Unit Max	15 A
Ripple. max	20 mV pp
Temperature Range Without Derating From	-25 °C
Temperature Range Without Derating To	50 °C

Efficiency	97.8 %
Life span	114 000 h @ 10 A, 40 °C
MTBF (IEC 61709)	886 000 h @ 10 A, 40 °C

Width	49 mm
Height	124 mm
Depth	117 mm
Weight	0.545 kg

Approvals	ABS, CB, CE, CSA, CSA US, EX, GL, IECEx, UL
Material Protection	Aluminium
IP Class	IP20
Charging The Battery Type	3 A
Voltage Level Of The Connection Of The Battery	22.3 V DC
Permitted Battery Sizes	17-130 Ah

Fig. 9-1 **Buffer time vs. output current with a 65Ah and a 100Ah battery**

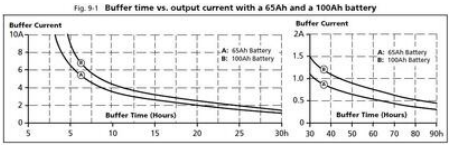

Fig. 25-2 **Front view**

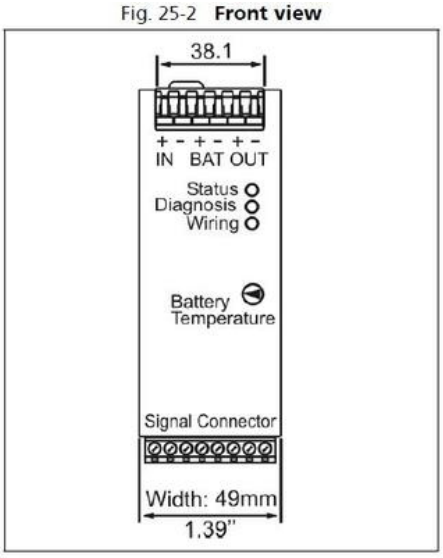

Fig. 24-1 **Side view**

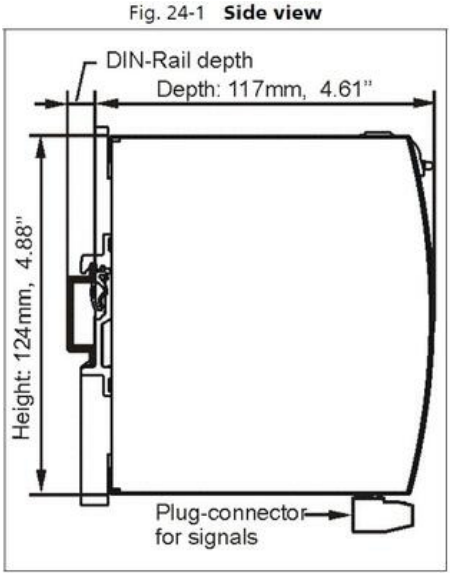

Fig. 25-1 **Typical wiring diagram**

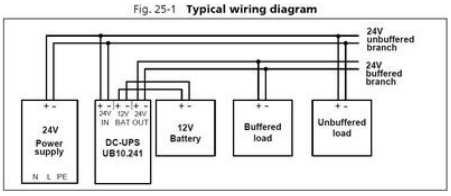

Fig. 9-1 **Buffer time vs. output current with a 65Ah and a 100Ah battery**

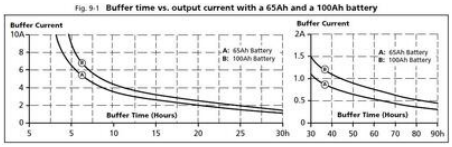

Fig. 25-2 **Front view**

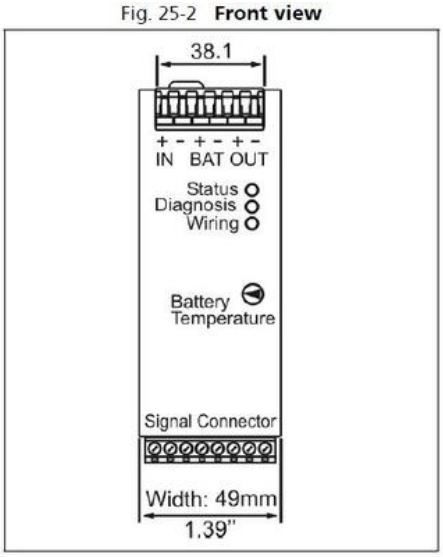

Fig. 24-1 **Side view**

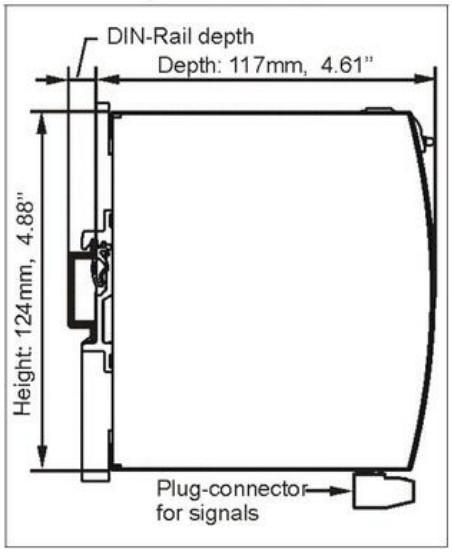

Fig. 25-1 **Typical wiring diagram**

