REDUNDANT MODULE 20 A PIANO SERIES

PIRD20.241
REDUNDANCY MODULE 12-24V 2x10A PIANO



- 39 mm wide
- Two diodes
- Screw terminals
- Cost effective solution

PRODUCT DESCRIPTION

The PIRD20.241 is a redundancy module, which can be used to build 1+1 and N+1 redundant systems. It is equipped with two input channels, which can be connected to power supplies with up to 10A output current and one output, which can carry nominal currents up to 20A. The module is suitable for power supplies with constant current overload behavior as well as any kind of “hiccup” overload behavior. The PIRD20.241 is the perfect solution to use in a redundant system, if the power supply itself is equipped with a DC-OK signal. Another application for this redundancy module is to separate sensitive loads from non-sensitive loads. This avoids the distortion of the power quality for the sensitive loads which can cause controller failures.

SPECIFICATIONS

Input voltage DC	12-28 V
Input voltage dc min	9 V DC
Input voltage dc max	35 V DC
Input current per channel max	10 A
Type Power Supply	Redundancy modules

Output voltage	24 V DC
Output Current	20 A
Output current max	26 A
Temperature Range Without Derating From	-40 °C
Temperature Range Without Derating To	55 °C

Width	39 mm

Height	124 mm
Depth	124 mm
Weight	0.28 kg

Series	Piano
Approvals	ATEX, CE, CSA, IECEx, UL
Material Protection	ABS plastic
IP Class	IP20
Voltage Drop Over The Semi-Conductor	560 mV

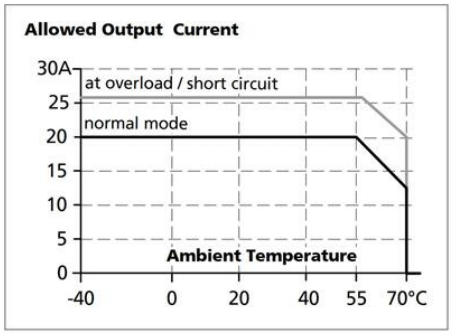



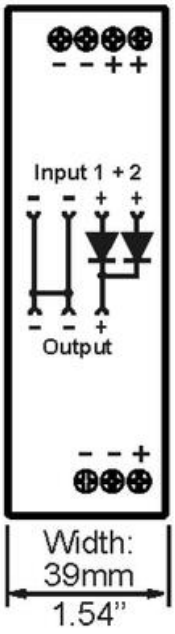

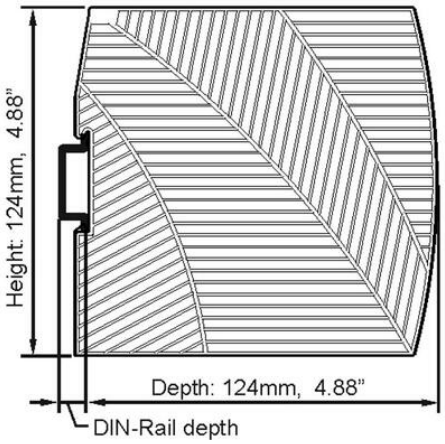

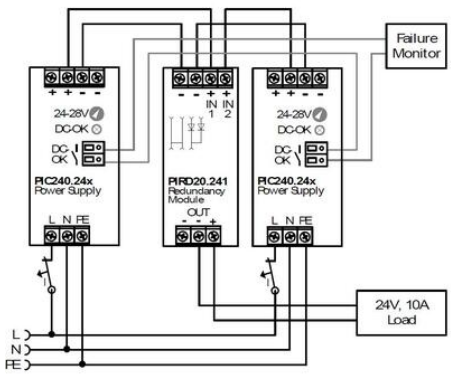

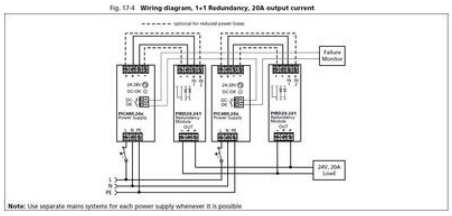

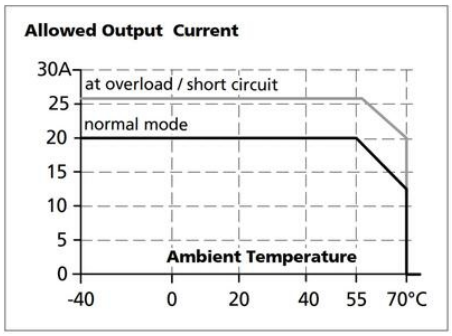
Allowed Output Current
30A
25
20
15
10
5
0
at overload / short circuit
normal mode
Ambient Temperature
-40
0
20
40
55
70°C


Input 1 + 2
Input 1 + 2
Output
PULS
PIANO
PIRD 20.241
Redundancy
Module
Output
DC 12-28V 20A

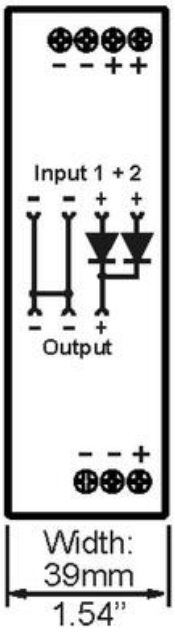
Input 1 + 2
Output
Width:
39mm
1.54”

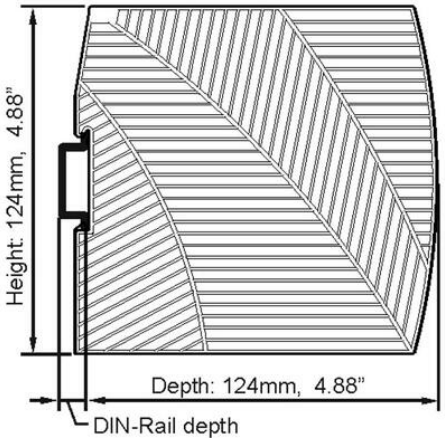
Height: 124mm, 4.88”
Depth: 124mm, 4.88”
DIN-Rail depth

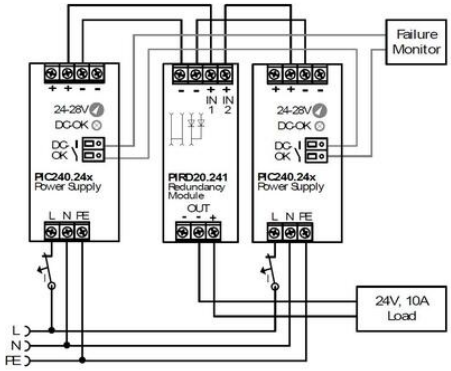
Failure
Monitor
24-28V
DC-OK
DC
OK
PIC240.24x
Power Supply
L N PE
IN
1
IN
2
PIRD20.241
Redundancy
Module
OUT
24V, 10A
Load
L
N
FE

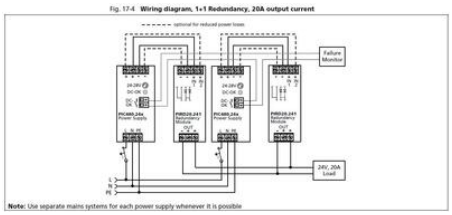
Fig. 17-4 Wiring diagram, 1+1 Redundancy, 20A output current
Failure
Monitor
24V, 20A
Load
Note: Use separate mains systems for each power supply whenever it is possible