PUREX 650

Fume extractor

080465D
PUREX 650 - 230V Vacuum Control



- Easy to move fume extractor with 1 or 2 transparent fume hoods
- Adjustable air flow up to 645m³/h
- Standard filters: F5 Pre-filter + HEPA/Activated carbon main filter
- Gas & particle sensors after the filters
- Electronic pressure control

PRODUCT DESCRIPTION

Easy to move & Flexible Fume extractor with long extraction arm and clear fume extraction cowl

Purex 650 is designed for mobile work where high flexibility is required from the fume extractor.
The Purex 650 is easy to move due to the wheels under the machine, and the long extraction arm makes it easy to work on even the most demanding objects.

The machine is supplied with one extraction arm, but it is possible to upgrade with another arm and cowl to use on two separate workstations simultaneously, or to extract fumes from a larger working area.

Ominaisuudet:

- Adjustable air flow (Vacuum controlled)
- Electronic pressure sensor maintains constant vacuum level
- Clear and informative graphic display
- Gas & particle sensors after the filtration to warn the operator
- Activated carbon filtration removes harmful chemicals
- HEPA-filtration removes 99.997% of over 0.3µm sized particles
- Assembly and the filter change is easy and fast
- Easy to move due to the wheels under the machine
- Possibility of remote controlling, and possible to get filter status & machine status with a cable for automated processes
- Silent operation
- Brushless motor
- Machine made from stainless steel

There is a wide range of different filters available for the Purex 650 machine. Please refer to the product datasheet found on the bottom of this page.

With an separate cable connection, it is possible to remote control the 650-machine, for example with a push button that can be installed on the workdesk, or from an automated process. You can also get the filter status signal, and machine status signal from the machine to use with an automated process, or building automation.

Link to manufacturers product page

Standard package includes:

- 1 x HEPA/Chemical filter + F5 Pad Pre-filter
- 1 x Extraction arm with clear extraction cowl

Included



The 650 machine is suitable for either single arm or dual arm.

The machine is high in mobility due to its castors and the 75mm multi position arm; meaning the machine can be moved from station to station as and when required. The arm has a working range of between 550mm and 1620mm.

The large hood area of 420mm x 320mm gives the operator ample space to work.

Optional Extra

Upgrade your 650 machine with an additional arm!

Code:
Arm - 120197
Hood - 840116



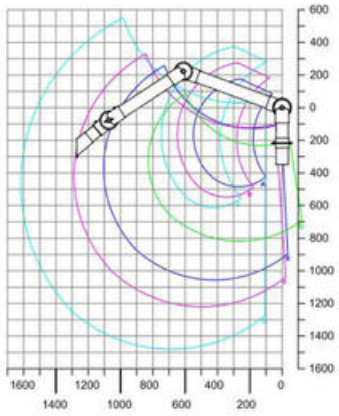

SPECIFICATIONS

Depth	610 mm
Height	720 mm
Number of inputs	1
Sound level max	60 dB
Typical Converters	0.36 kW
Voltage	230 V
Weight	55 kg
Width	445 mm



