UNIVERSAL BRACKET STEGOFIX

SF O95

STEGOFIX



- Direct fixing of small appliances and DIN rail
- Simple to mount
- Self-adhesive or screw mountable
- -30 °C to +55 °C

PRODUCT DESCRIPTION

STEGOFIX makes installation of smaller components in cabinets significantly quicker, simpler and cheaper than before. Changes and additions made afterwards can be easily conducted even in tight spaces. Because there are pre-drilled holes in STEGOFIX, mounting of DIN rails is much more convenient.

SPECIFICATIONS

Approvals	EAC, RoHS
Color	Black
Depth	14 mm
Flamklass	UL94-V0
Height	38 mm
Material Plastic Housing	Polyamide
Operational Temperature	-45°C ... +70°C
Storage temperature	-45°C ... +70°C
Width	43 mm

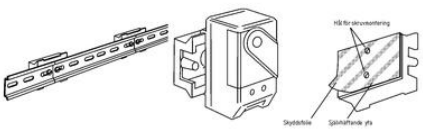

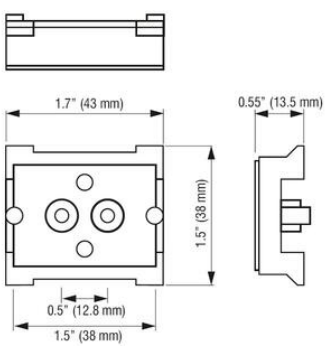

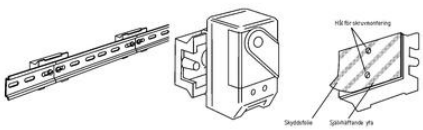





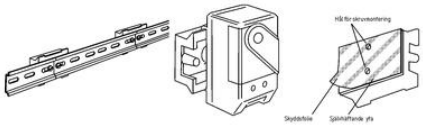
Hål för skruvmontering
Skyddsfolie
Självhäftande yta

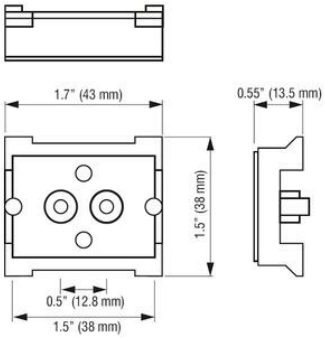
1.7" (43 mm)
0.55" (13.5 mm)
1.5" (38 mm)
0.5" (12.8 mm)
1.5" (38 mm)