PRESSURE COMPENSATION DEVICE

DA 284

28400.0-00
DA 284 Plastic, M40, IP66, pack of 2



- High protection class - IP66
- Double-acting waterproof membrane
- Stainless steel housing option for the food industry
- Helps prevent condensation
- Quick fit snap in version

PRODUCT DESCRIPTION

If a cabinet is subjected to temperature variations, such as day/night or if heat is rapidly produced in the cabinet during operation and then cools when operation ceases, pressure changes occur and condensation is formed if the cabinet is too tightly sealed. In some cases the cabinet can even have a negative pressure, i.e. a vacuum, and dust and moisture can enter the cabinet through the door strips. A very easy way to eliminate condensation and dust in the cabinet is to mount ventilation housing DA284. This ventilation housing has a double-acting membrane, which entails that moist air is discharged from the cabinet and dry, clean air is brought in, leaving dust and moisture outside.

TECHNICAL DATA

	DA284 - Plastic housing	DA284 - Stainless steel housing
Installation	M40x1.5 threads with accompanying nuts	M40x1.5 threads with accompanying nuts
Material	Polyamide 6, light grey	Stainless steel V2A (DIN 1.4404 7 AISI 316 L)
Filter	Double-acting membrane	Double-acting membrane
Air capacity	1200 l/h (at air pressure >70 mbar)	1200 l/h (at air pressure >70 mbar)
Operating temperature	-40 °C to +80 °C	-40 °C to +80 °C
Enclosure class	IP66	IP66
Approval	CE , UL	CE

DIMENSIONS

DA284 - Plastic housing	DA284 - Stainless steel housing

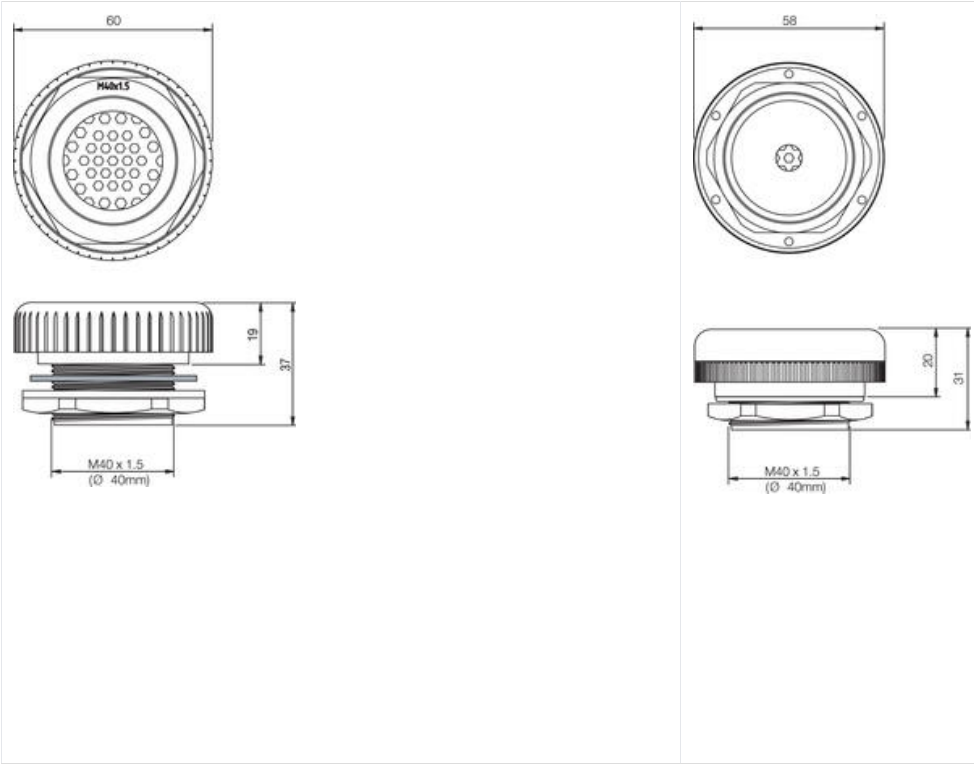

ORDER NUMBER

Order no.	Designation
28400.0-00	Ventilation housing DA284, polyamide (2 pcs)
28400.0-01	Ventilation housing DA284, polyamide (1 pc)
28401.0-00	Ventilation housing DA284, stainless steel/AISI 303 (1 pc)
28401.0-02	Ventilation housing DA284, stainless steel/AISI 316L (1 pc)

SPECIFICATIONS

Air Capacity	1.2 m³/h
Approvals	EAC, RoHS
Color	Light Grey
Depth	37 mm
Diameter	60 mm
Drag Torque Nut	5
IP Class	IP66
Material of body	Plastic
Material Plastic Housing	PA6
Operational Temperature	-35°C ... +70°C

Punching	M40
Storage temperature	-35°C ... +70°C
Structural Depth	16 mm
Torque max	5
Weight	0.09 kg



