DRAIN VALVE

DD 084

08410.0-00
DD 084 Drainage device, M50, 200ml/h, IP66 / IP67 / IP69K



- High enclosure class
- Good drainage capacity
- quick Mount
- Robust
- Weather and UV resistant

PRODUCT DESCRIPTION

Condensation occurs in enclosures with high enclosure class when changing temperature. The use of a drain valve DD084 enables condensation to be removed without losing the maximum enclosure class.
The membrane structure prevents splashing of water from outside into the enclosure.

SPECIFICATIONS

Approvals	EAC, RoHS, UV - UL746C (f1)
Color	Grey
Diameter	60 mm
Drag Torque Nut	6
Height	49.5 mm
IP Class	IP66, IP67, IP69K
Operational Temperature	-45°C ... +70°C
Storage temperature	-45°C ... +70°C
Structural Depth	17.5 mm
The Flow Of Water	200 ml/h
Torque max	6
Weight	0.06 kg

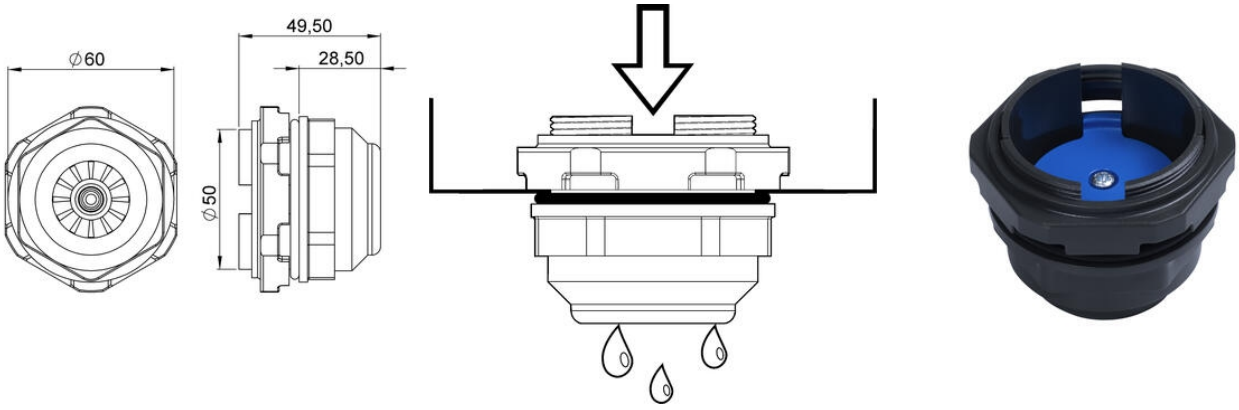
49,50
28,50
⌀60
⌀50