AUER EX CLASSIFIED SIGNAL HORN MHPT

301100110
Ex/ATEX Signal horn, 110 V ac, MHPT



- Strong, well-designed signal horn
- For use in Zone 1 and 2
- Insulation class II
- IP54, -20 to +70 ° C

PRODUCT DESCRIPTION

Strong well-designed horn for use in areas exposed to explosions in zones 1 and 2.
The housing is made of impact resistant synthetic material.
Insulation class II.
DC models with electronic switch.

SPECIFICATIONS

Color House	Black
IP Class	IP54
Nominal current max	0.15 A
Nominal current min	0.15 A
Number of tones	1
Operating Voltage AC Max	122.5 V AC
Operating Voltage AC Min	103.5 V AC
Sound level max	108 dB
Sound level min	108 dB
Temperature range from	-20 °C
Temperature range to	60 °C
Terminal connection	2.5 mm²
Weight	500 g

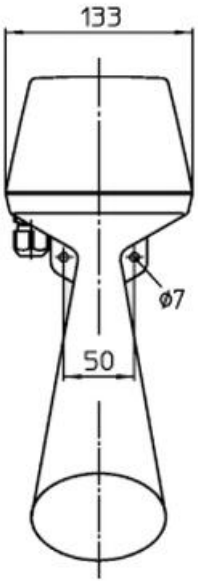
133
ø7
50

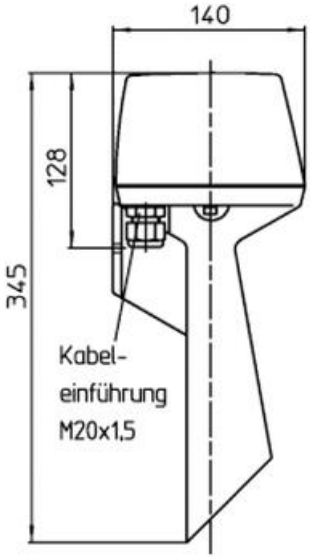
140
128
345
Kabel-
einführung
M20x1,5

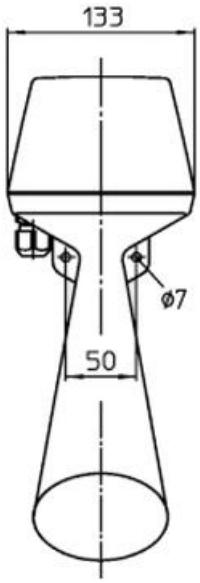
133
ø7
50

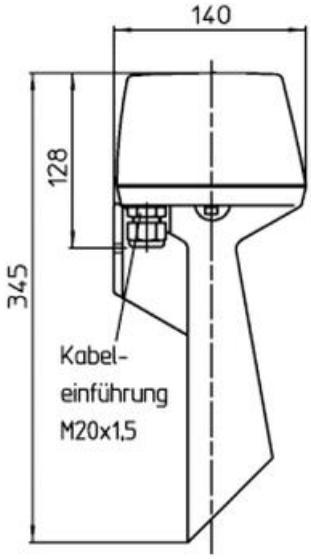
140
128
345
Kabel-
einführung
M20x1,5