SIGNAL TOWER MODULSIGNAL 70 MM

210501900
SLL ORANGE WARNING LIGHT



- Modular
- IP65 rated
- Temperature range -25 °C...+70 °C

PRODUCT DESCRIPTION

Modular signal towers consisting of up to 5 modules. Sound or combi module can be installed as is or with 1 - 4 signal modules. Signal modules are compatible with Ba15d or LED light bulbs. ModulSignal 70mm series LED bulbs consist of 30 SMD LED bulbs with 20mCd luminosity. The LED modules are highly recommended for demaniding environments due to long service life.

The modules are easy to assemble and maintain. A broken light light bulb can be changed without having to disassemble the whole tower. The modules and the base are protected so all maintanance procedures can be done even with the power switched on. The base includes a 6 pole connector numbered from 0 to 5.

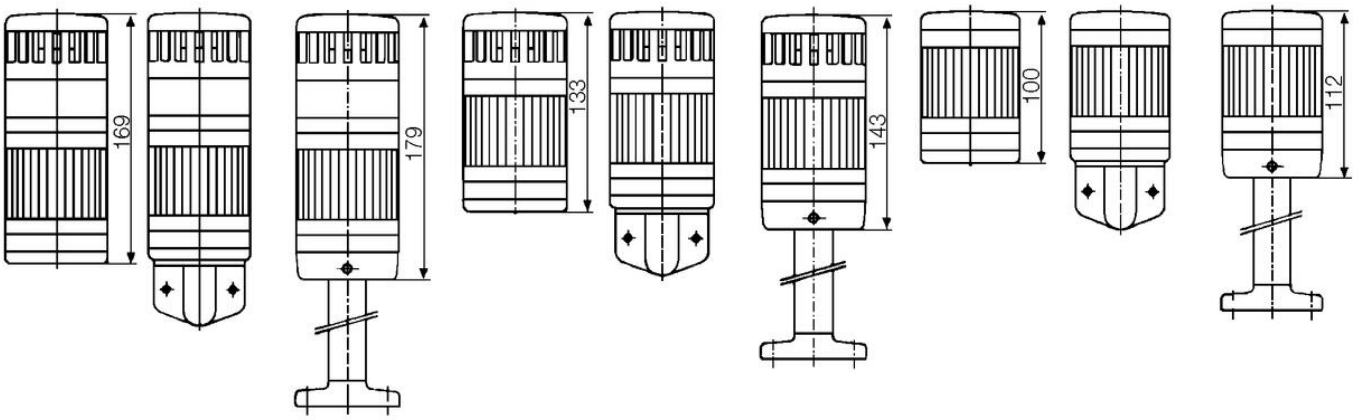

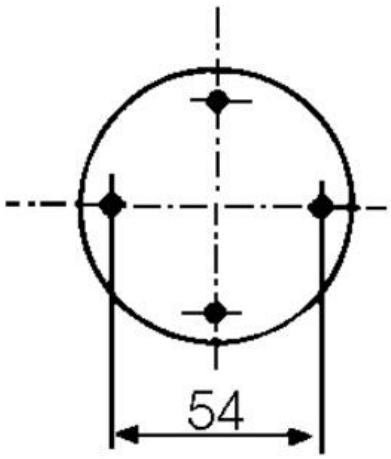
54

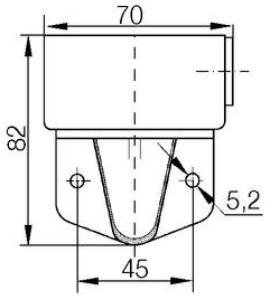
70
82
5,2
45

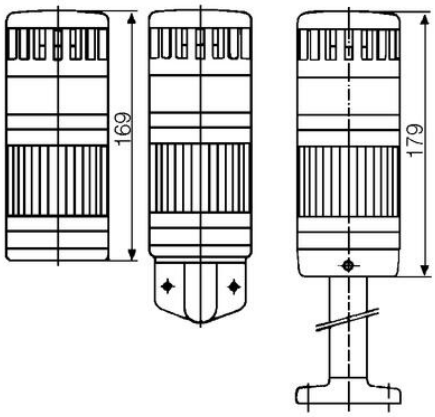
169
179

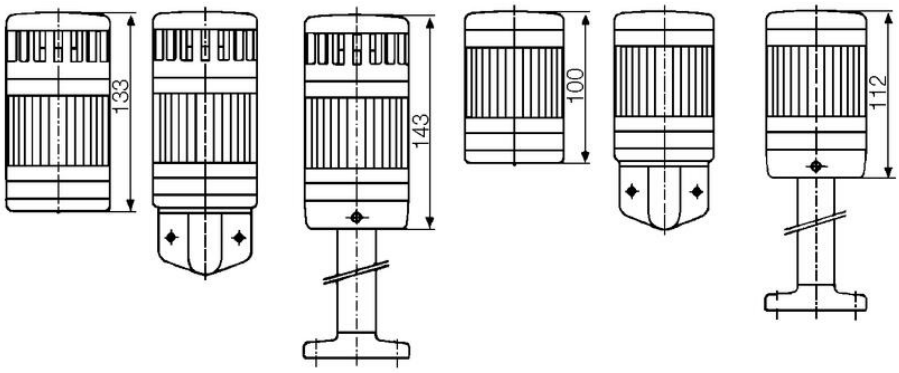
133
143
100
112

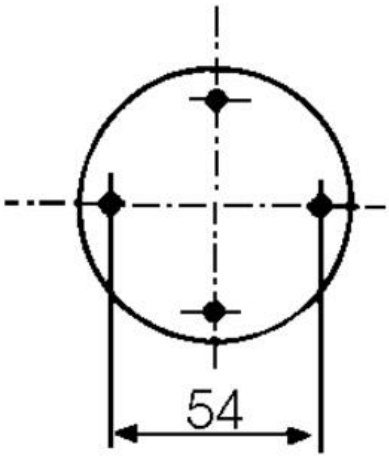
54

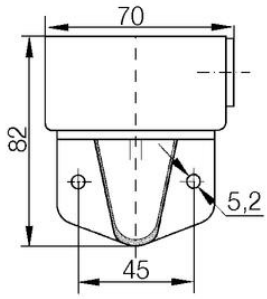
70
82
5,2
45