AUER - BUZZER, SIREN AND COMBI-SIGNAL, HPT/HTG

712100005
HPT / 108dB / 24VDC



- Membrane siren
- 108 dB
- IP67 HTGL

PRODUCT DESCRIPTION

Powerful siren for both indoor and outdoor use. Used in e.g industries and docks. Also available in versions for telephone signals on request (HPTR).

TECHNICAL DATA

Noise level at 1 metre	108 dB
Material	HTG Aluminium HPT Grey ABS, water resistant
Plinth connection	2.5 mm²
Cable entry	6.5–12 mm
Temperature range	-20 °C to +50 °C
Voltages	24 V DC/230 V AC, 50 Hz. Other voltages on request
Voltage tolerance	±10 %
Enclosure class	(IP67-HTGL) HPT IP55, HTG IP65
Approvals	CE

DIMENSIONS

ORDER NUMBER

Order No.	Type	Description	Noise level	Voltage
712100005	HPT	Siren, ABS plastic IP55	108 dB	24 V DC
712100113	HPT	Siren, ABS plastic IP55	108 dB	230 V AC

713100113	HTG	Siren, aluminium IP65	108 dB	230 V AC
713100005	HTG	Siren, aluminium IP65	108 dB	24 V AC

SPECIFICATIONS

Color House	Grey RAL 7035
IP Class	IP55
Mounting	Vertically
Nominal current max	0.6 A
Nominal current min	0.6 A
Number of tones	1
Sound level max	108 dB
Sound level min	108 dB
Supply voltage	24 V DC
Supply Voltage DC Max	26.4 V DC
Supply Voltage DC Min	21.6 V DC
Temperature range from	-20 °C
Temperature range to	50 °C
Terminal connection	2.5 mm²
Weight	800 g

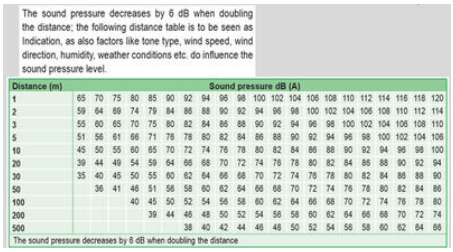
The sound pressure decreases by 6 dB when doubling the distance; the following distance table is to be seen as Indication, as also factors like tone type, wind speed, wind direction, humidity, weather conditions etc. do influence the sound pressure level.

Distance (m)	Sound pressure dB (A)																			
1	65	70	75	80	85	90	92	94	96	98	100	102	104	106	108	110	112	114	116	118	120
2	59	64	69	74	79	84	86	88	90	92	94	96	98	100	102	104	106	108	110	112	114
3	55	60	65	70	75	80	82	84	86	88	90	92	94	96	98	100	102	104	106	108	110
5	51	56	61	66	71	76	78	80	82	84	86	88	90	92	94	96	98	100	102	104	106
10	45	50	55	60	65	70	72	74	76	78	80	82	84	86	88	90	92	94	96	98	100
20	39	44	49	54	59	64	66	68	70	72	74	76	78	80	82	84	86	88	90	92	94
30	35	40	45	50	55	60	62	64	66	68	70	72	74	76	78	80	82	84	86	88	90
50		36	41	46	51	56	58	60	62	64	66	68	70	72	74	76	78	80	82	84	86
100				40	45	50	52	54	56	58	60	62	64	66	68	70	72	74	76	78	80
200						39	44	46	48	50	52	54	56	58	60	62	64	66	68	70	72	74
500								38	40	42	44	46	48	50	52	54	56	58	60	62	64	66

The sound pressure decreases by 6 dB when doubling the distance

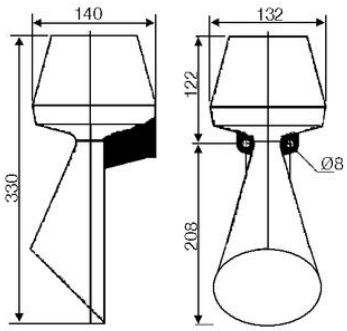

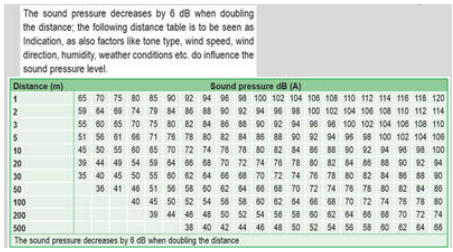
The sound pressure decreases by 6 dB when doubling the distance; the following distance table is to be seen as Indication, as also factors like tone type, wind speed, wind direction, humidity, weather conditions etc. do influence the sound pressure level.

Distance (m) | Sound pressure dB (A)
1 65 70 75 80 85 90 92 94 96 98 100 102 104 106 108 110 112 114 116 118 120
2 59 64 69 74 79 84 86 88 90 92 94 96 98 100 102 104 106 108 110 112 114
3 55 60 65 70 75 80 82 84 86 88 90 92 94 96 98 100 102 104 106 108 110
5 51 56 61 66 71 76 78 80 82 84 86 88 90 92 94 96 98 100 102 104 106
10 45 50 55 60 65 70 72 74 76 78 80 82 84 86 88 90 92 94 96 98 100
20 39 44 49 54 59 64 66 68 70 72 74 76 78 80 82 84 86 88 90 92 94
30 35 40 45 50 55 60 62 64 66 68 70 72 74 76 78 80 82 84 86 88 90
50 36 41 46 51 56 58 60 62 64 66 68 70 72 74 76 78 80 82 84 86
100 40 45 50 52 54 56 58 60 62 64 66 68 70 72 74 76 78 80
200 39 44 46 48 50 52 54 56 58 60 62 64 66 68 70 72 74
500 38 40 42 44 46 48 50 52 54 56 58 60 62 64 66

The sound pressure decreases by 6 dB when doubling the distance

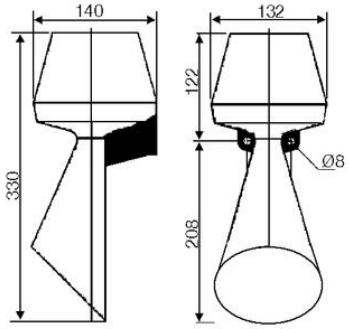
140
132
122
330
208
Ø8