CYLINDRICAL FUSE LINK 14X51, GG

FR14GG50V50
IEC ceramic cylindrical fuse 14x51 gG 500 V 50 A

- Ceramic body
- Silver-plated copper contacts
- 500 ... 690 V AC
- Breaking capacity 120 kA
- With or without striker

PRODUCT DESCRIPTION

gG type fuses are suitable for cable protection. Available with or without a striker.

SPECIFICATIONS
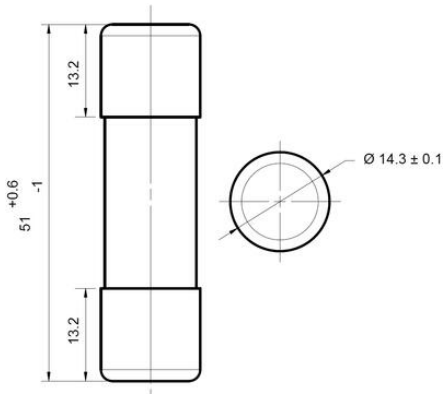
Approvals	BV, CE, DNV, GL, Lloyd´s
Breaking Capacity	120 kA
Characteristic (CVL)	gG
Nominal current	50 A
Pack Size	10
Voltage AC max	500 V