MOTOR SENSING INTERLOCK BEMF

BEMF-FSB-F-24D-2D



- For 1- and 3-phase motors
- For AC or DC motors up to 600V
- 2 NC + 2 PNP

PRODUCT DESCRIPTION

The BEMF Motor sensing Interlock is designed to control access to rotating machinery. The BEMF unit relies on the measurement of the electromotive force generated by the windings of an electric motor. Only when the motor has stopped will the BEMF drop to zero and allow the release of a Castell key. The unit is used for connection to AC and DC motors including DC braking systems. The BEMF has been designed to provide the highest level of safety when installed as part of an access control system for dangerous machinery.

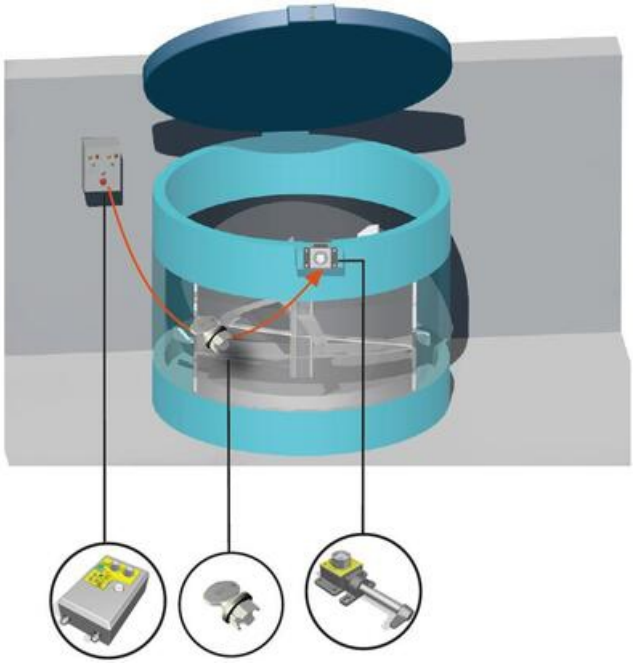

SPECIFICATIONS

Approvals	UL
Consumption	18 W
Contact Current Max	8 A

Contact Voltage Max	250 V
IP Class	IP65
Material Protection	Painted steel
Materials Locks	Brass
Motor Voltage Max	600 V
Temperature range from	-5 °C
Temperature range to	55 °C
Weight	5 kg

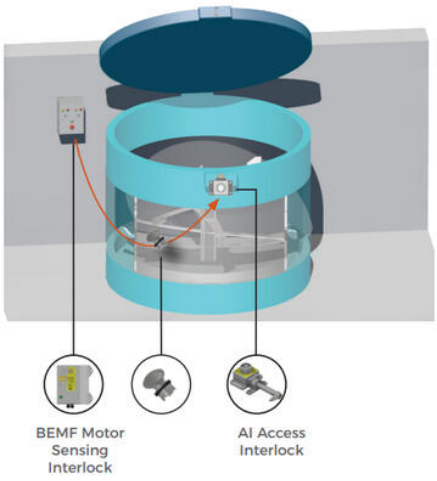

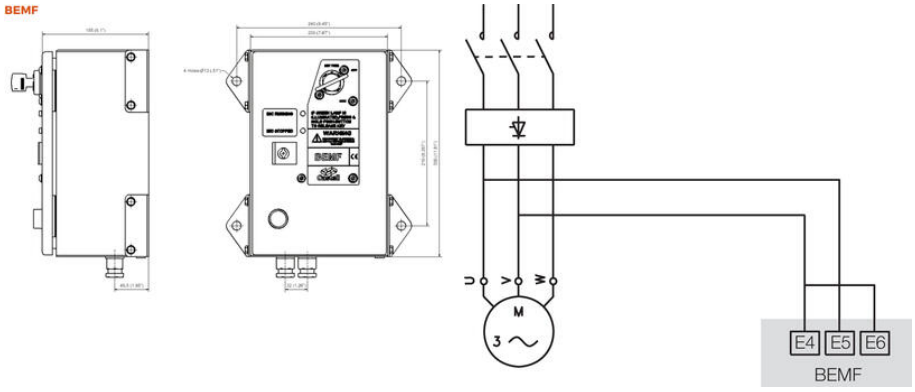

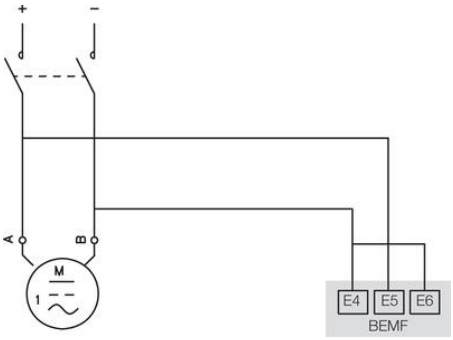

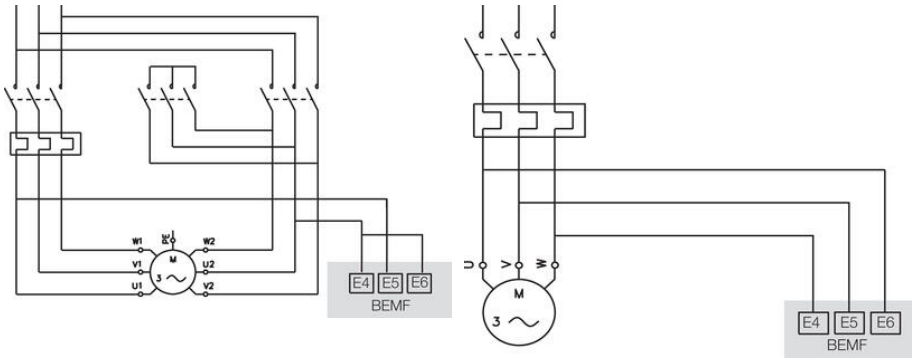

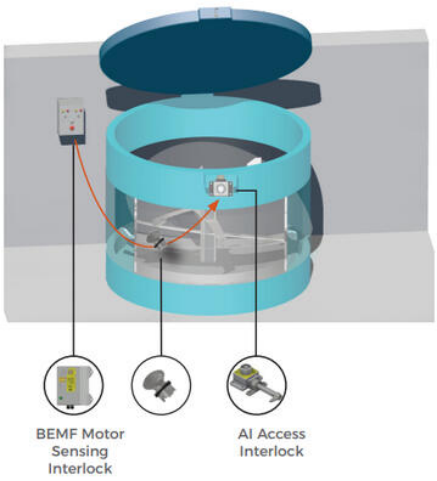

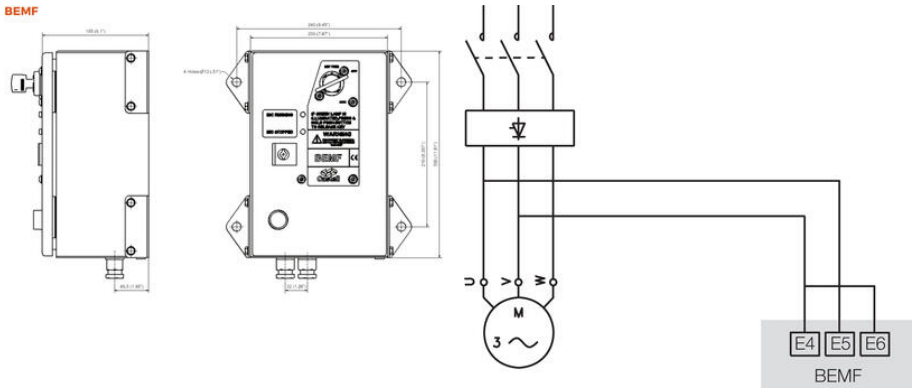

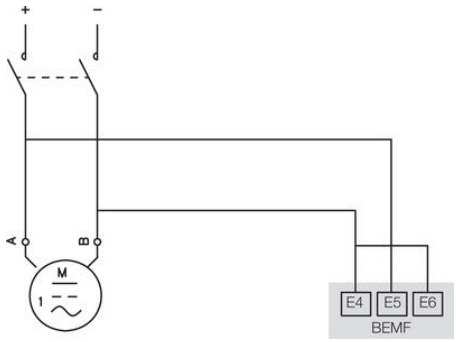
+
–
A
B
M
1
E4
E5
E6
BEMF

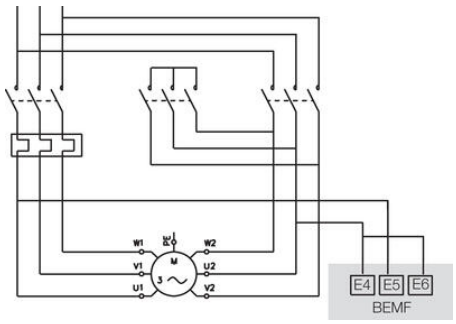
W1
PE
W2
V1
M
U2
3
U1
V2
E4
E5
E6
BEMF

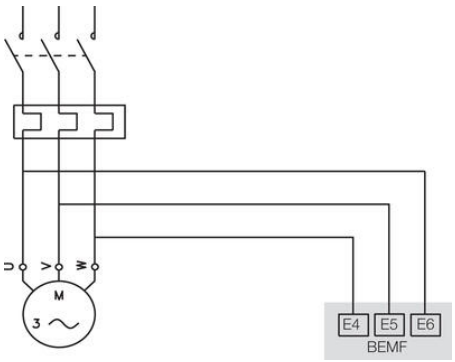
U
V
W
M
3
E4
E5
E6
BEMF