CASTELL GATESAFE

GATESAFE



- Emergency exit device for MAI and MAIE interlocks
- 2 NC + 1 NO contacts
- Robust design

PRODUCT DESCRIPTION

The Gatesafe is an emergency exit device that can be fitted to left & right hand hinged doors and should be used in conjunction with the Castell access locks, the MAI, AI, MAIE & AIE.

The Gatesafe is complete with an emergency stop button that can be depressed to both isolate the supply voltage and allow emergency exit from the area.

The switch contact arrangement of 2N/C 1N/O make it suitable for category 4 safety applications where cross monitoring is required. These features make it particularly suitable for full body access areas where personnel safety keys are not deployed. The Gatesafe is designed to operate as part of an access control system.

SPECIFICATIONS

Approvals	CE, CSA, UL
Contact Current Max	6 A
Contact Voltage Max	400 V
IP Class	IP65
Material Protection	Aluminium
Materials Locks	Stainless steel
Temperature ambient from	-25 °C
Temperature ambient to	140 °C
Weight	2.5 kg

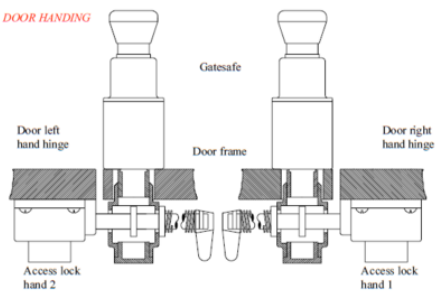





GATESAFE

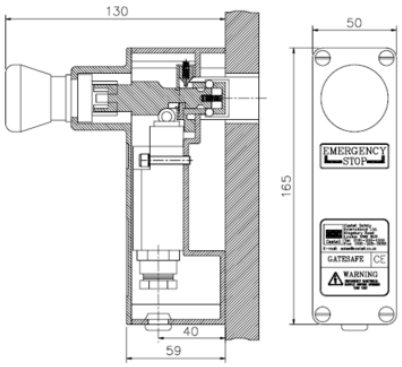

SWITCH CONTACTS

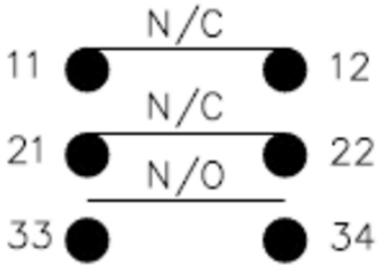

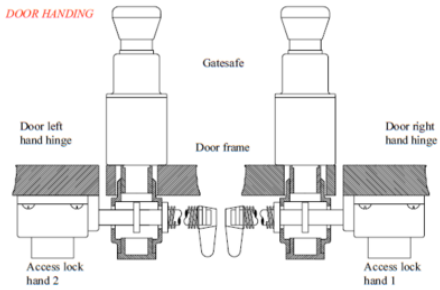





GATESAFE

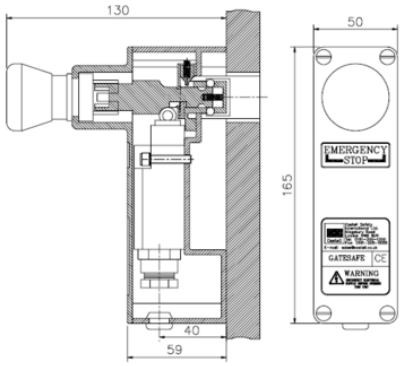

SWITCH CONTACTS

